GAT-X 105 STRIKE GUNDAM/ MBF-02 STRIKE ROUGE GUNDAM

FULL WEAPON SYSTEM(+CBP)

MODELING BY CREAM-BREAD

Color Guide

A-D	WHITE	4
E-R	BLACK	14
S-T	GRAY	2
U-W	RED	3
X-ㄱ	GREEN	4
ㄴ	L.BLUE	1
ㄷ	YELLOW	1
ㄹ	BLUE	1

INFORMATION
1-15 A.PACK

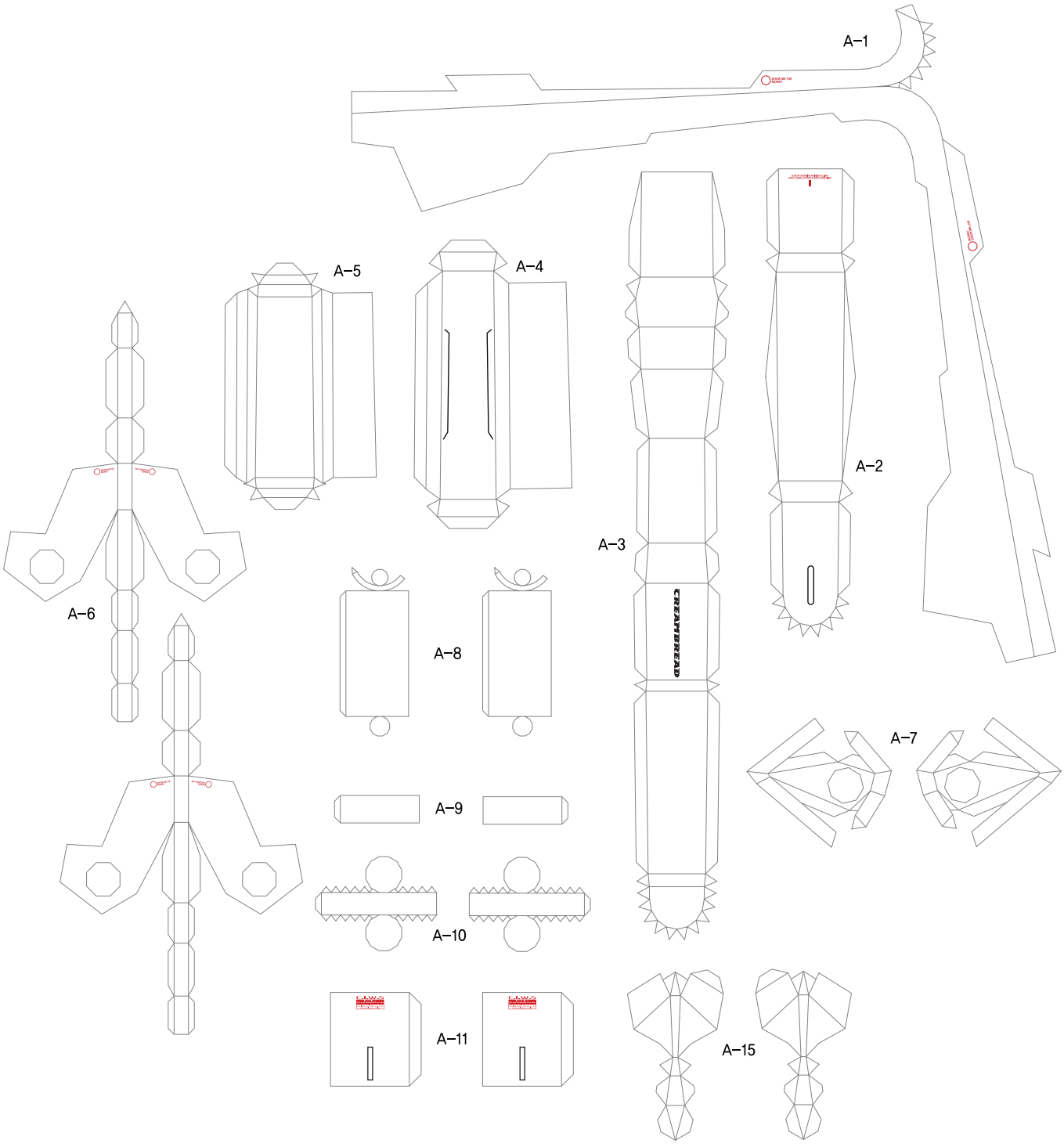

날개 끝 부분 부품입니다.
원하시는 색상지에 덧대어 자른 후 만드셔도 됩니다.
[원화의 설정색: 한쪽 파랑 한쪽 빨강(PG에일 원화참조)]

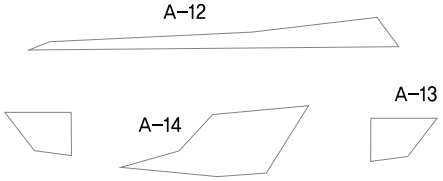

B white MODELING BY CREAM-BREAD /GAT-X105 FULL WEAPON

INFORMATION			
1–6	SHIELD	8–12	S.PACK
7	RIFLE		

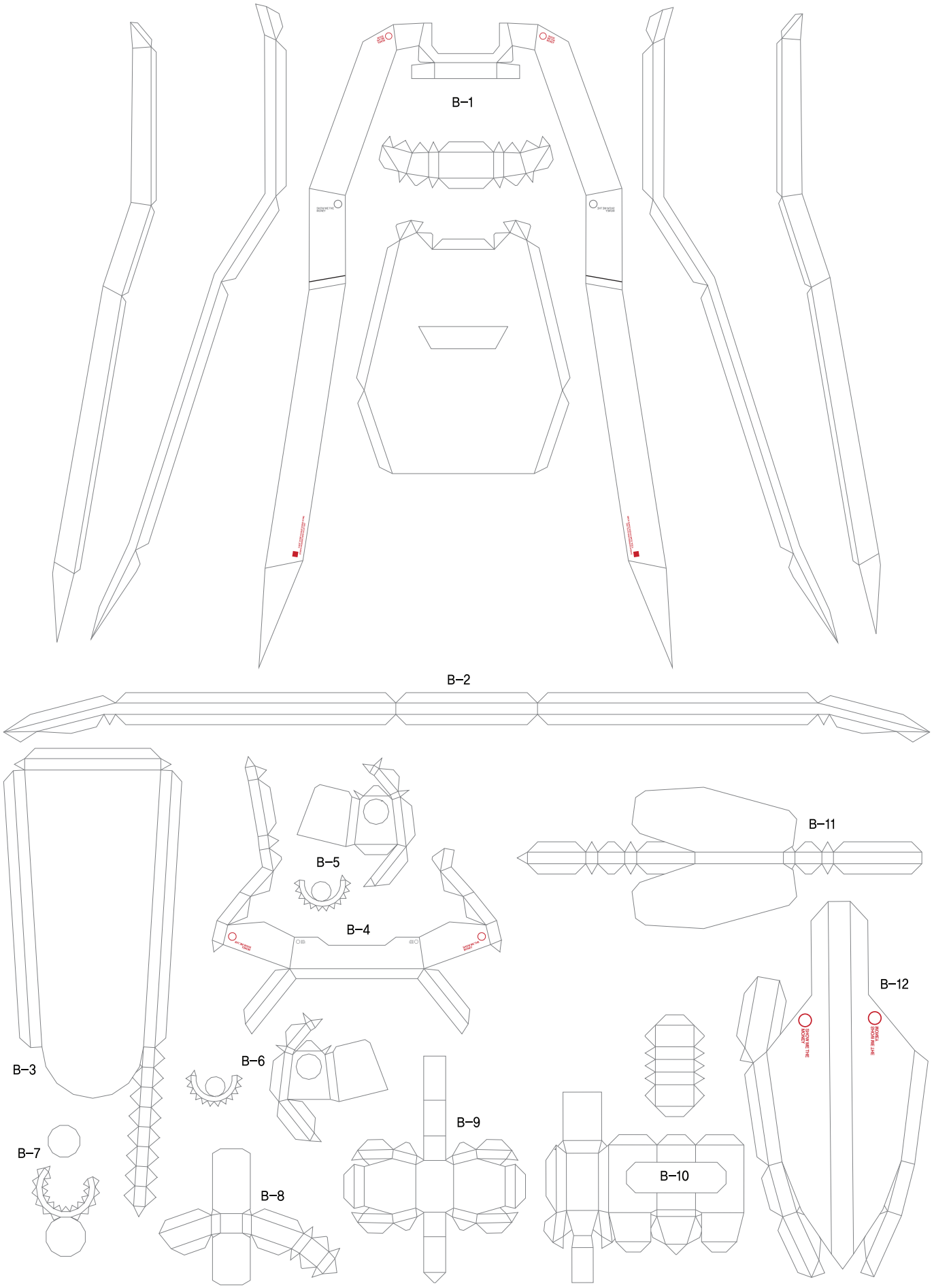

C white

MODELING BY CREAM-BREAD /GAT-X105 FULL WEAPON

INFORMATION
1–12 C.PACK

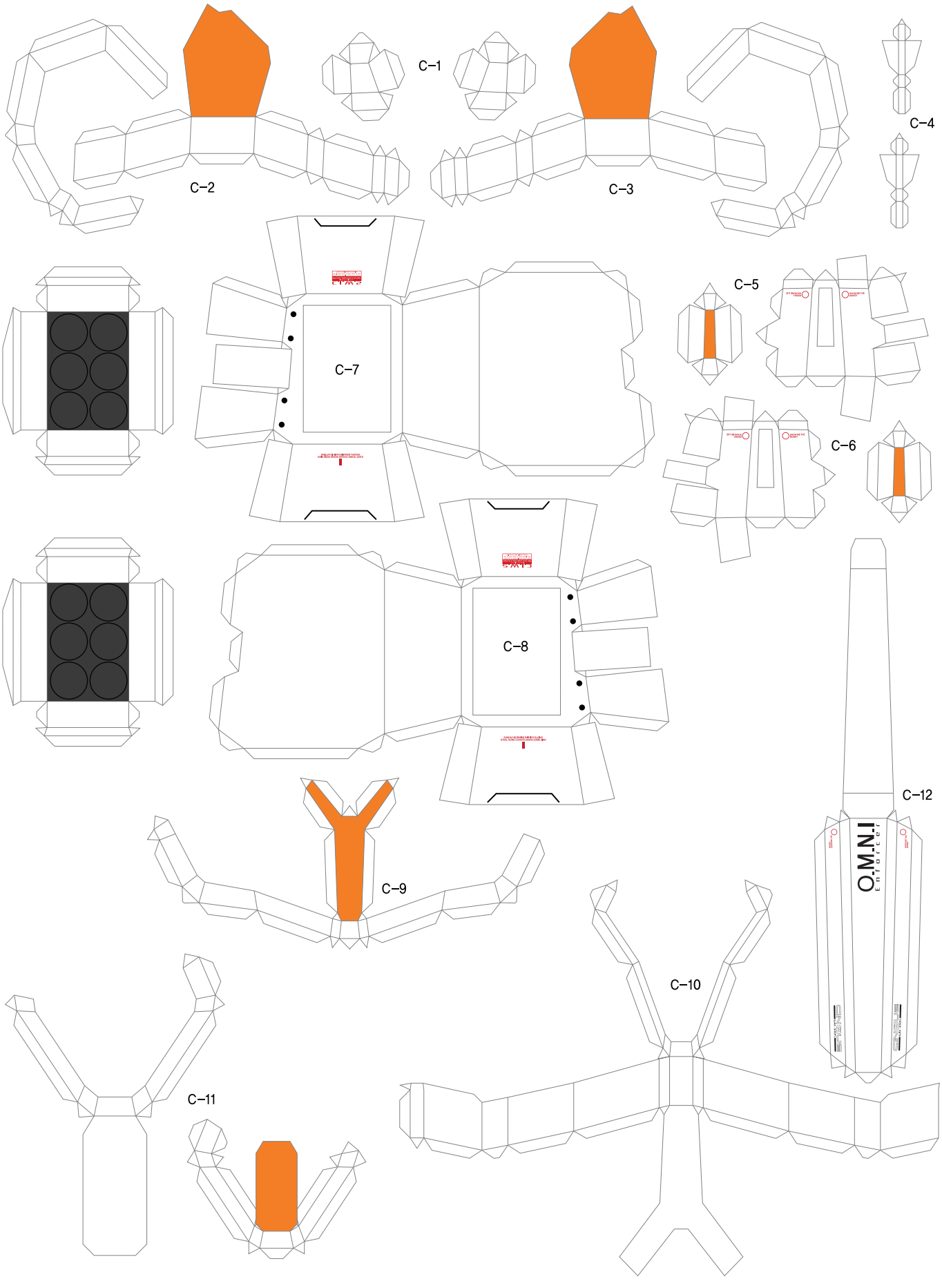

INFORMATION
1–12 C.PACK

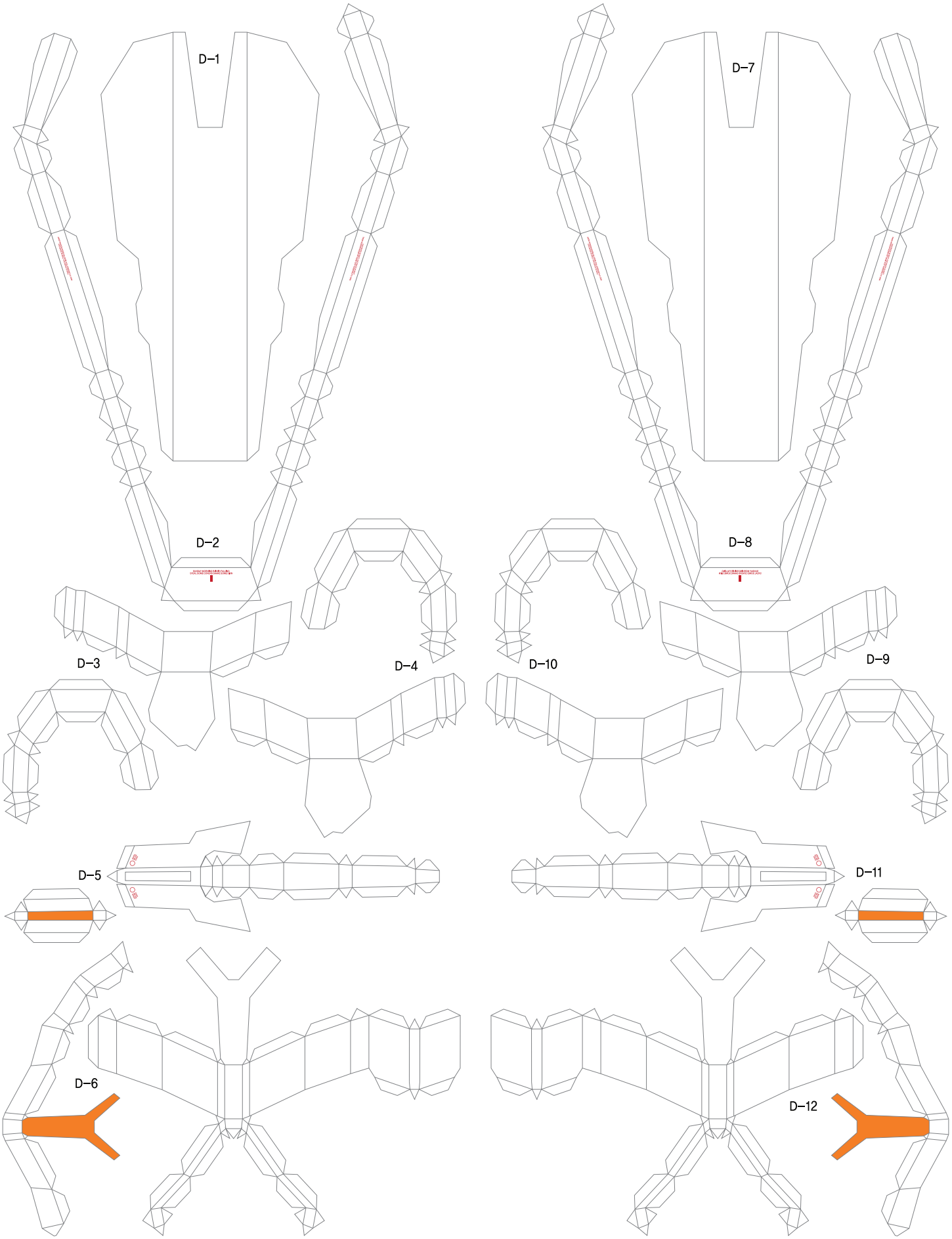

INFORMATION
1-23 A.PACK

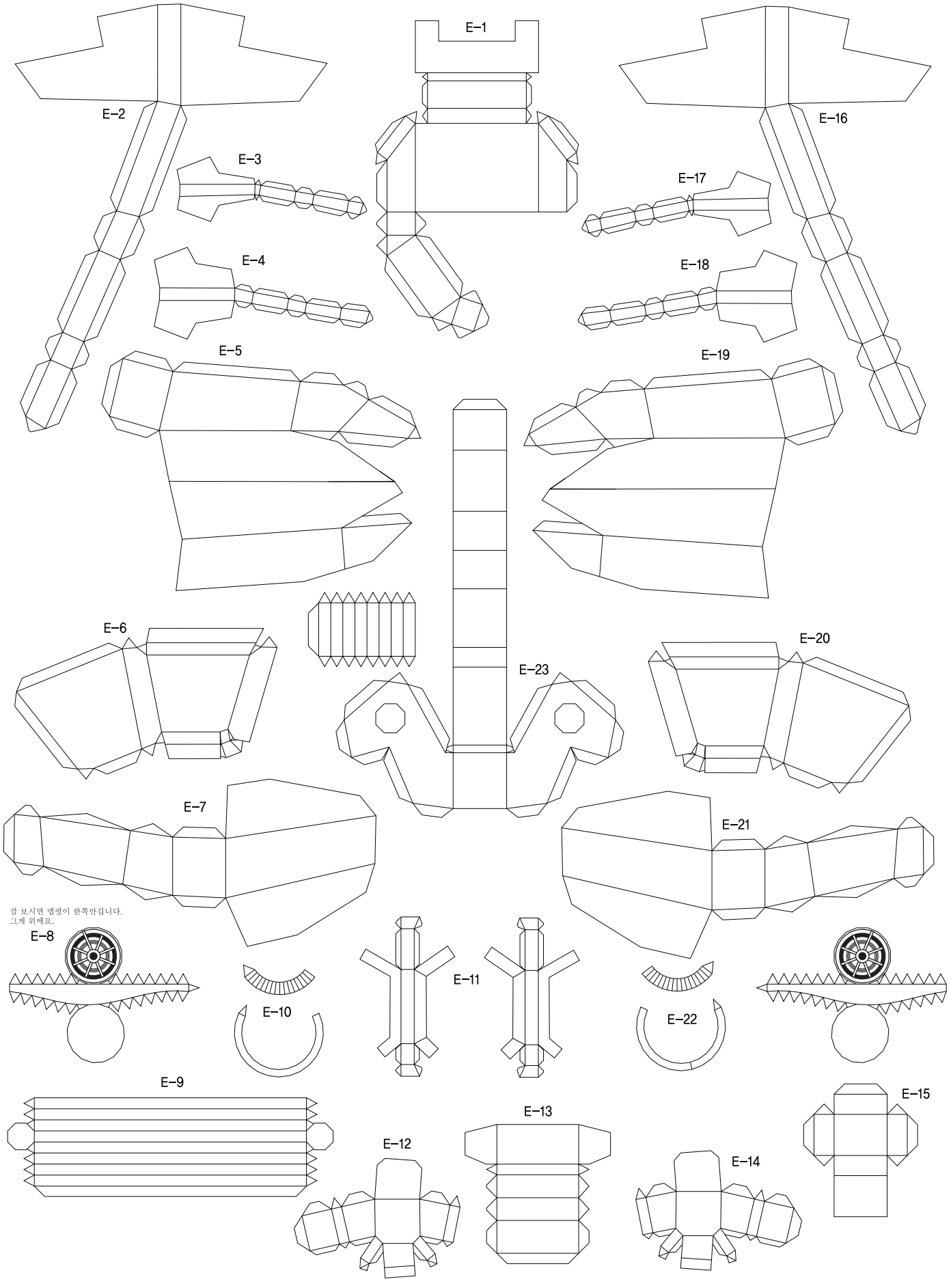

INFORMATION
1-17 A.PACK

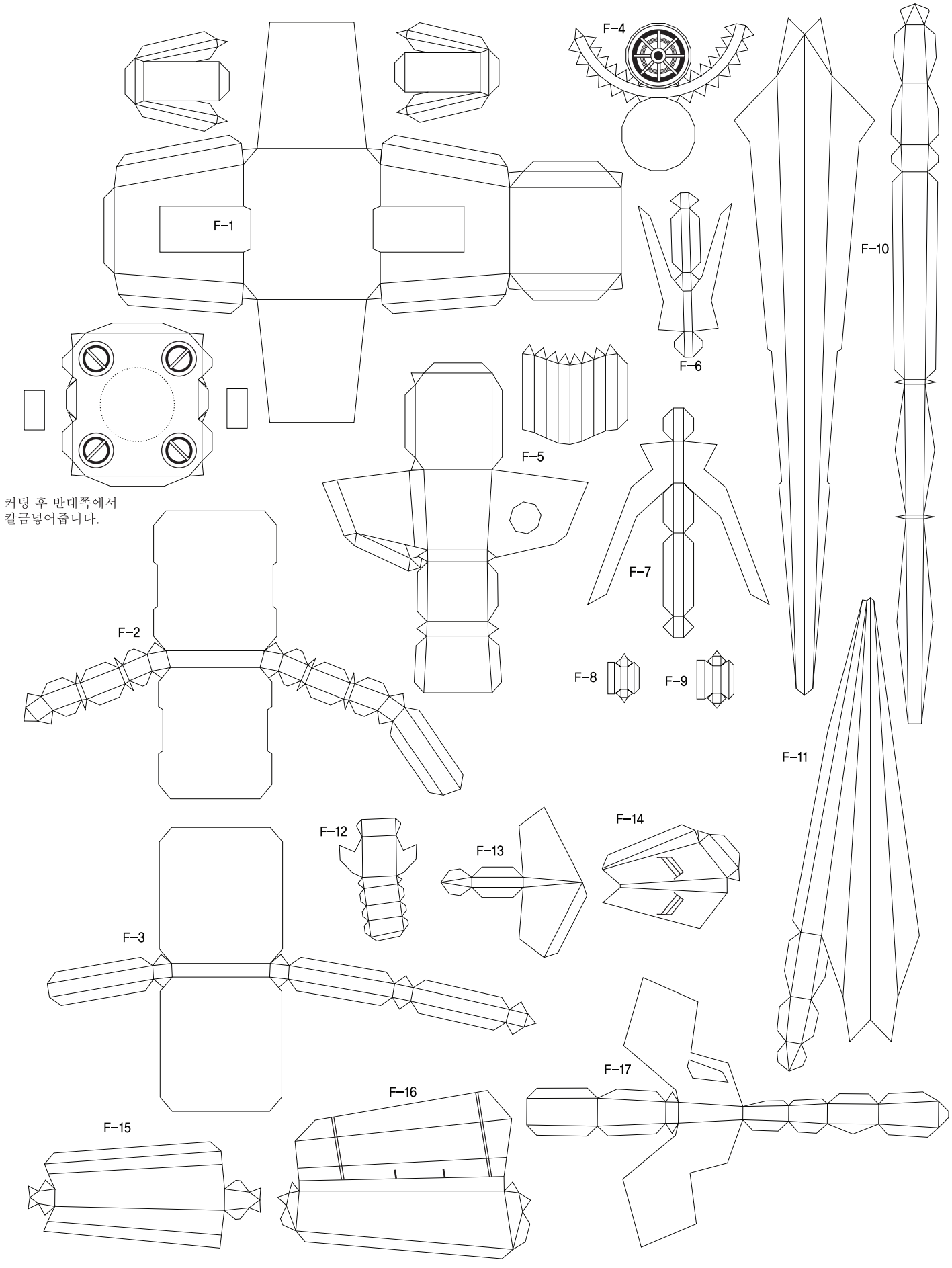

INFORMATION
1-17 A.PACK

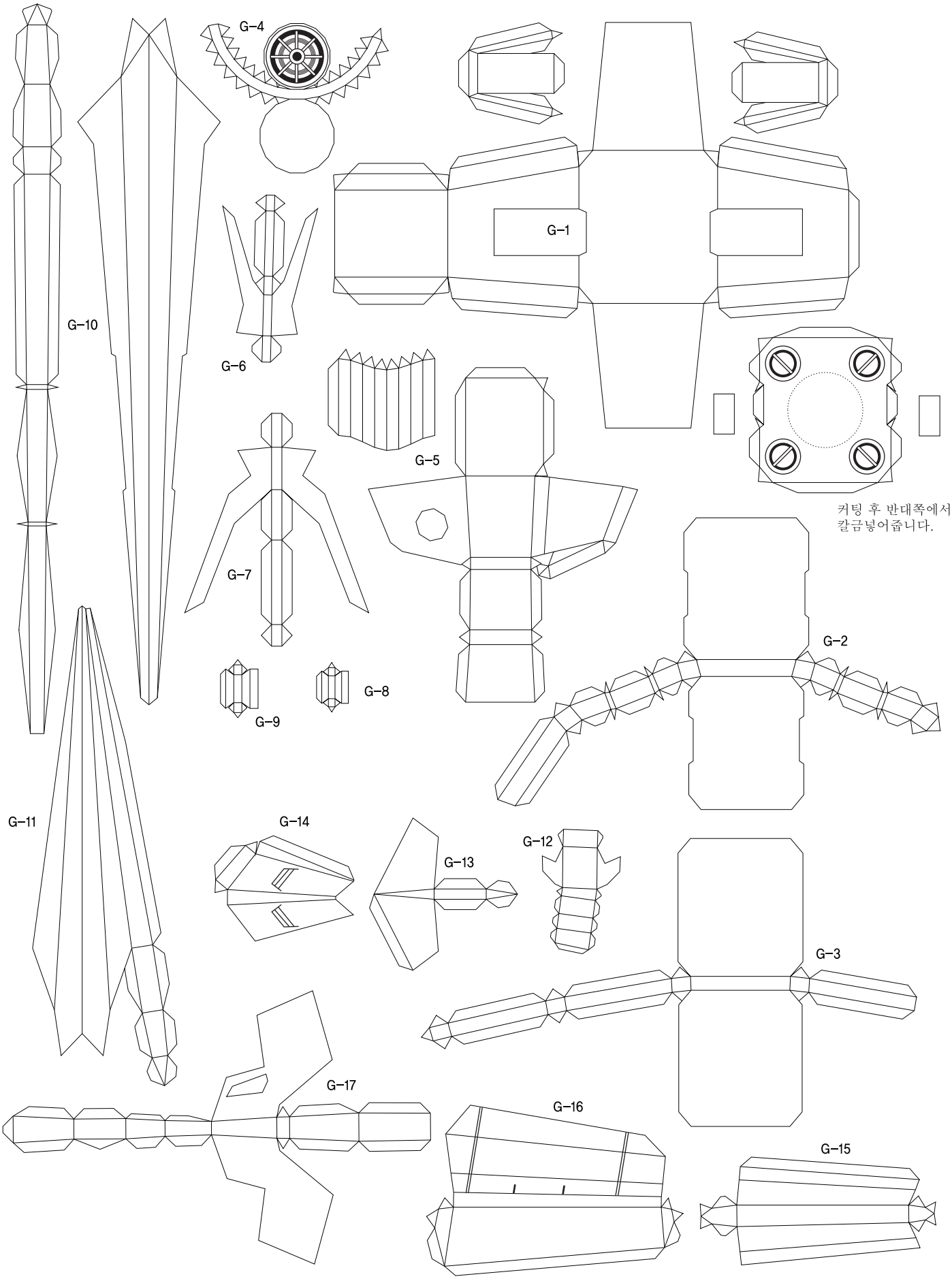

H black MODELING BY CREAM-BREAD /GAT-X105 FULL WEAPON

INFORMATION	
1–13	A.PACK
14–15	C.PACK

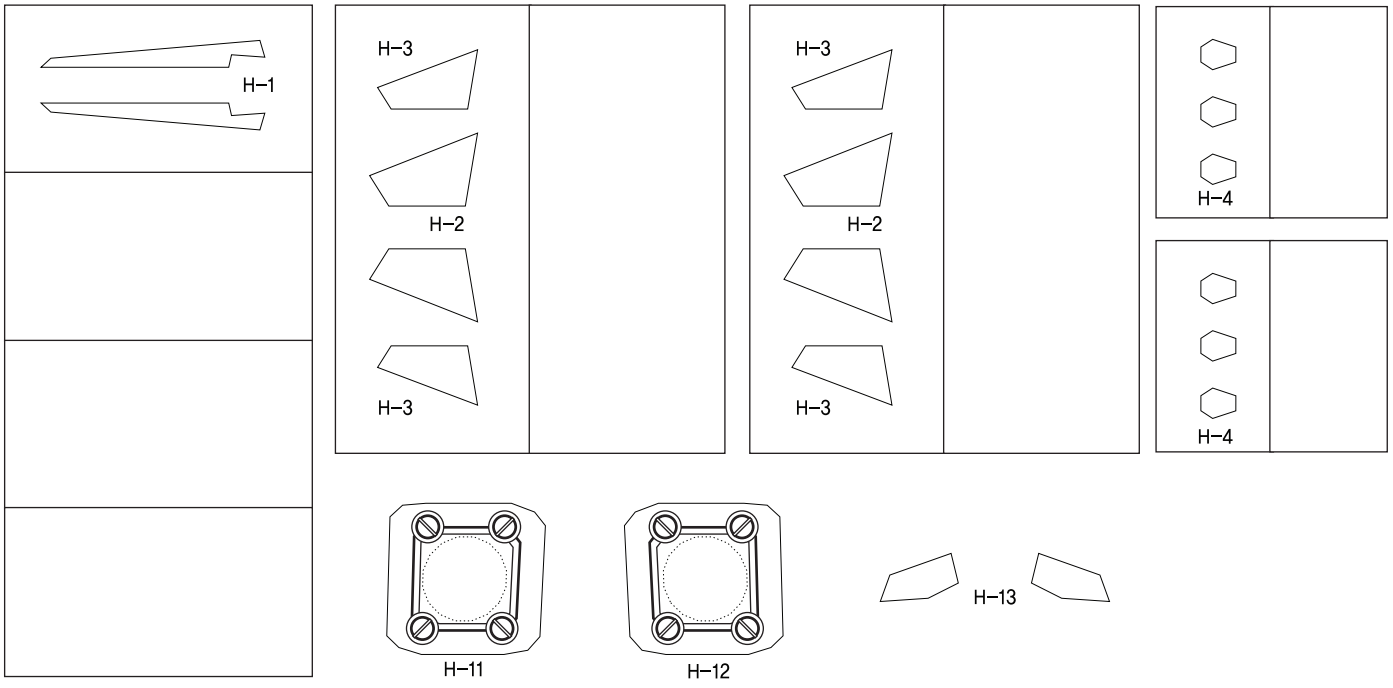

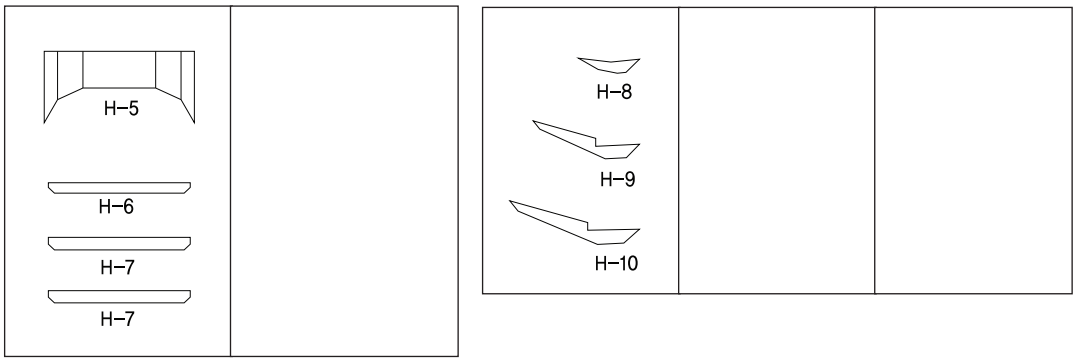

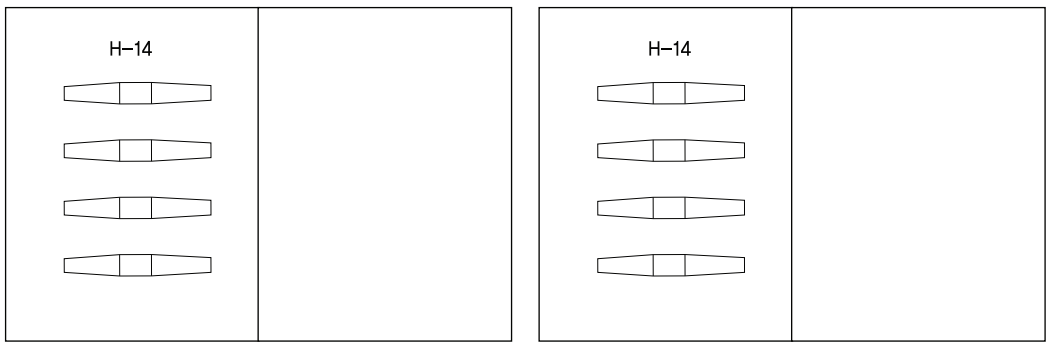

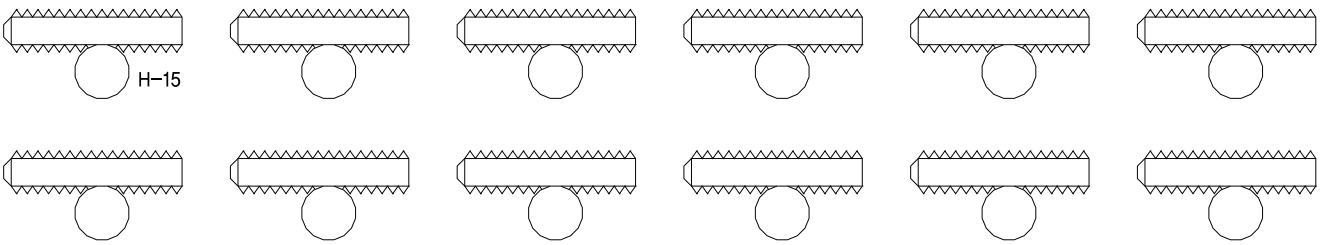

I black

MODELING BY CREAM-BREAD /GAT-X105 FULL WEAPON

INFORMATION	
1–29	RIFLE
30–39	SHIELD

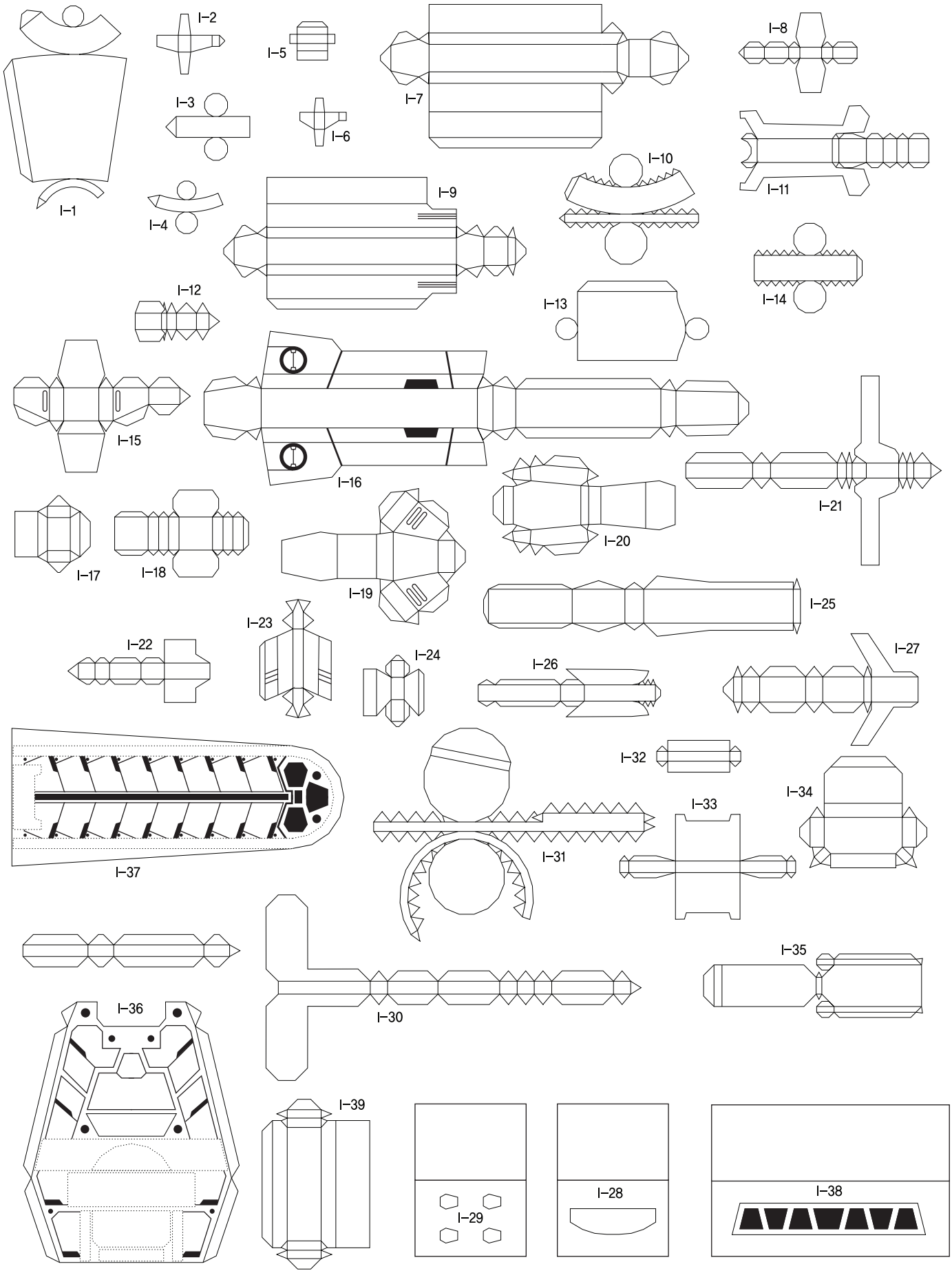

J black MODELING BY CREAM-BREAD /GAT-X105 FULL WEAPON

INFORMATION
1–27 L.PACK

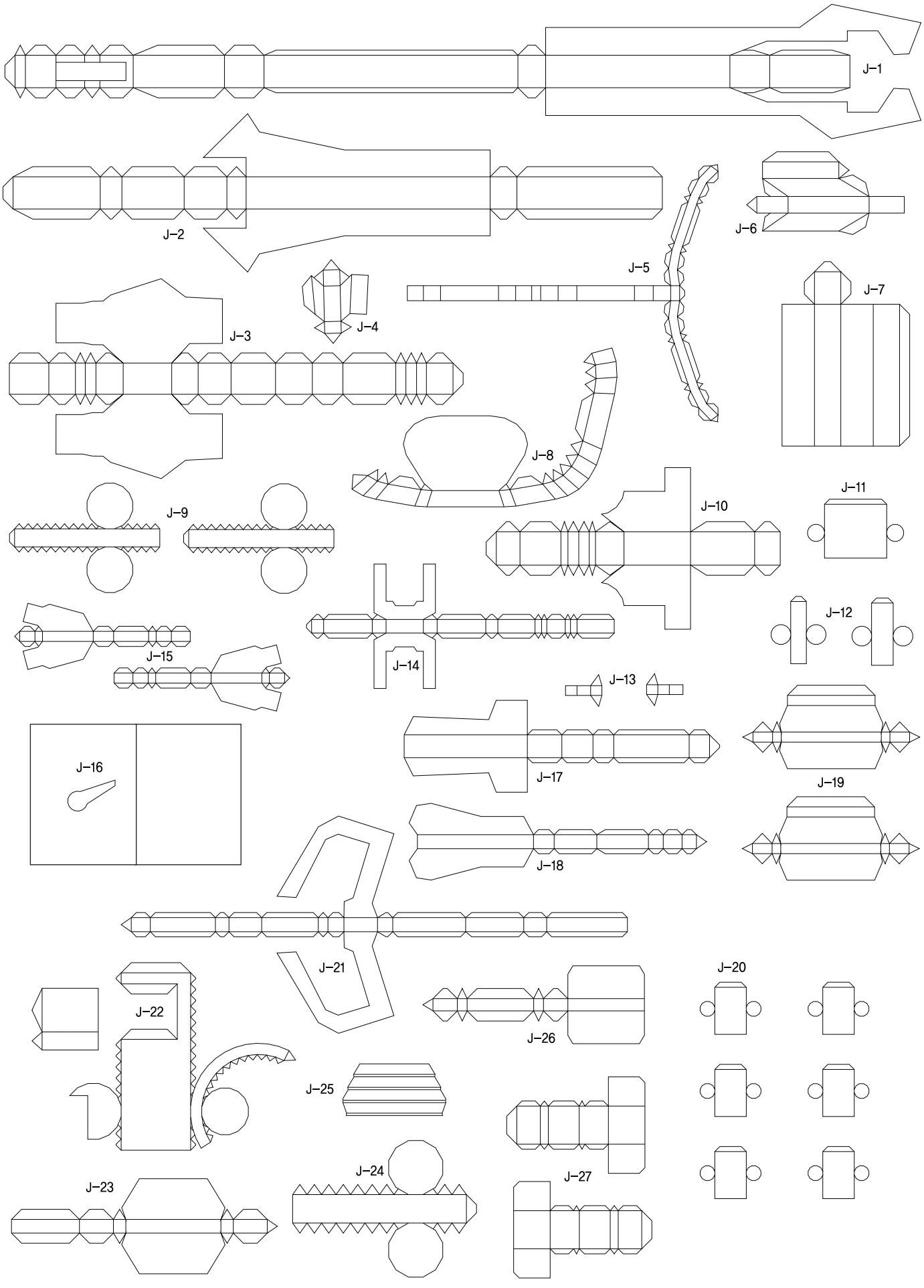

K black MODELING BY CREAM-BREAD /GAT-X105 FULL WEAPON

INFORMATION
1–24 L.PACK

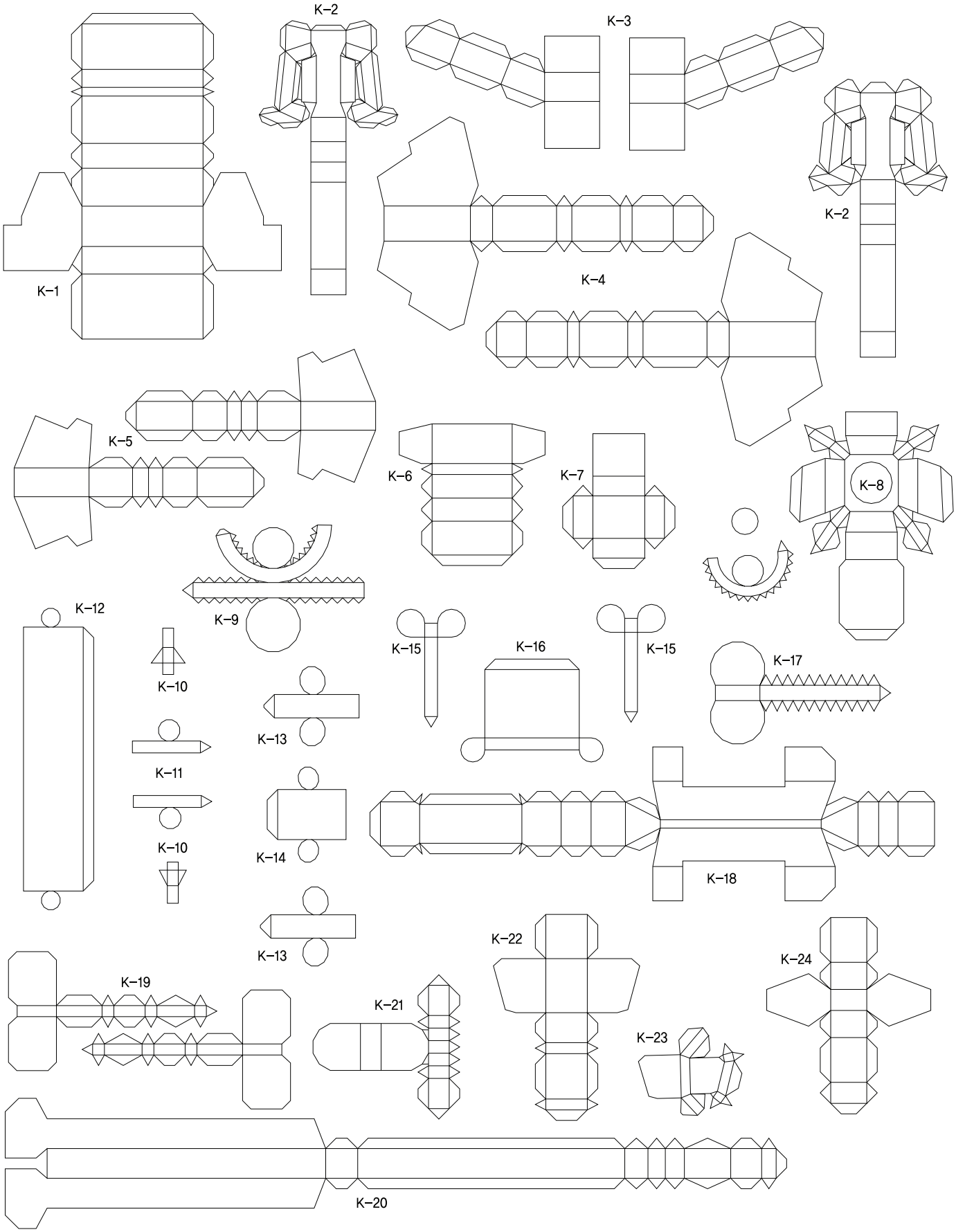

L black MODELING BY CREAM-BREAD /GAT-X105 FULL WEAPON

INFORMATION
1–28 S.PACK

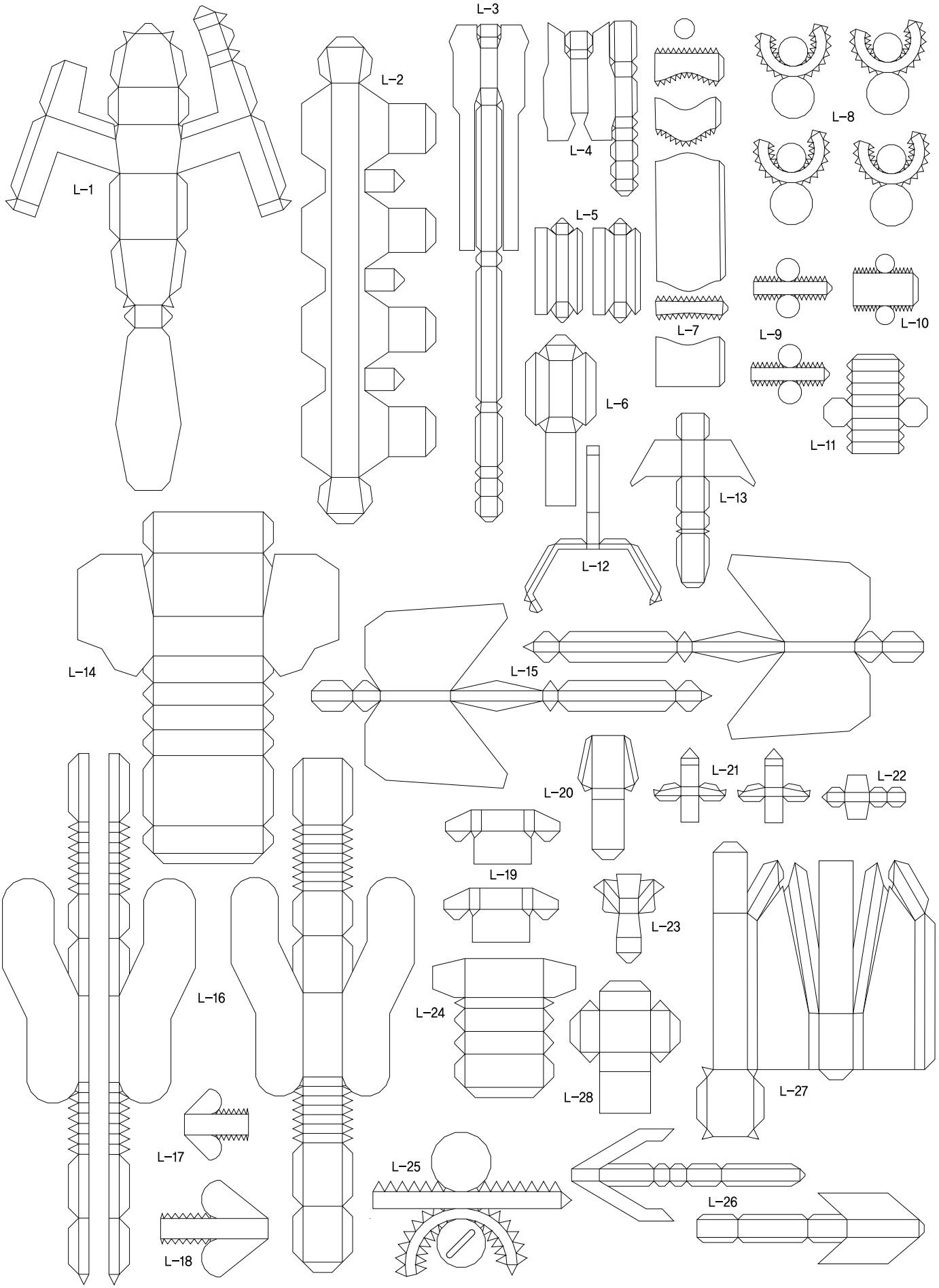

INFORMATION
1–29 S.PACK

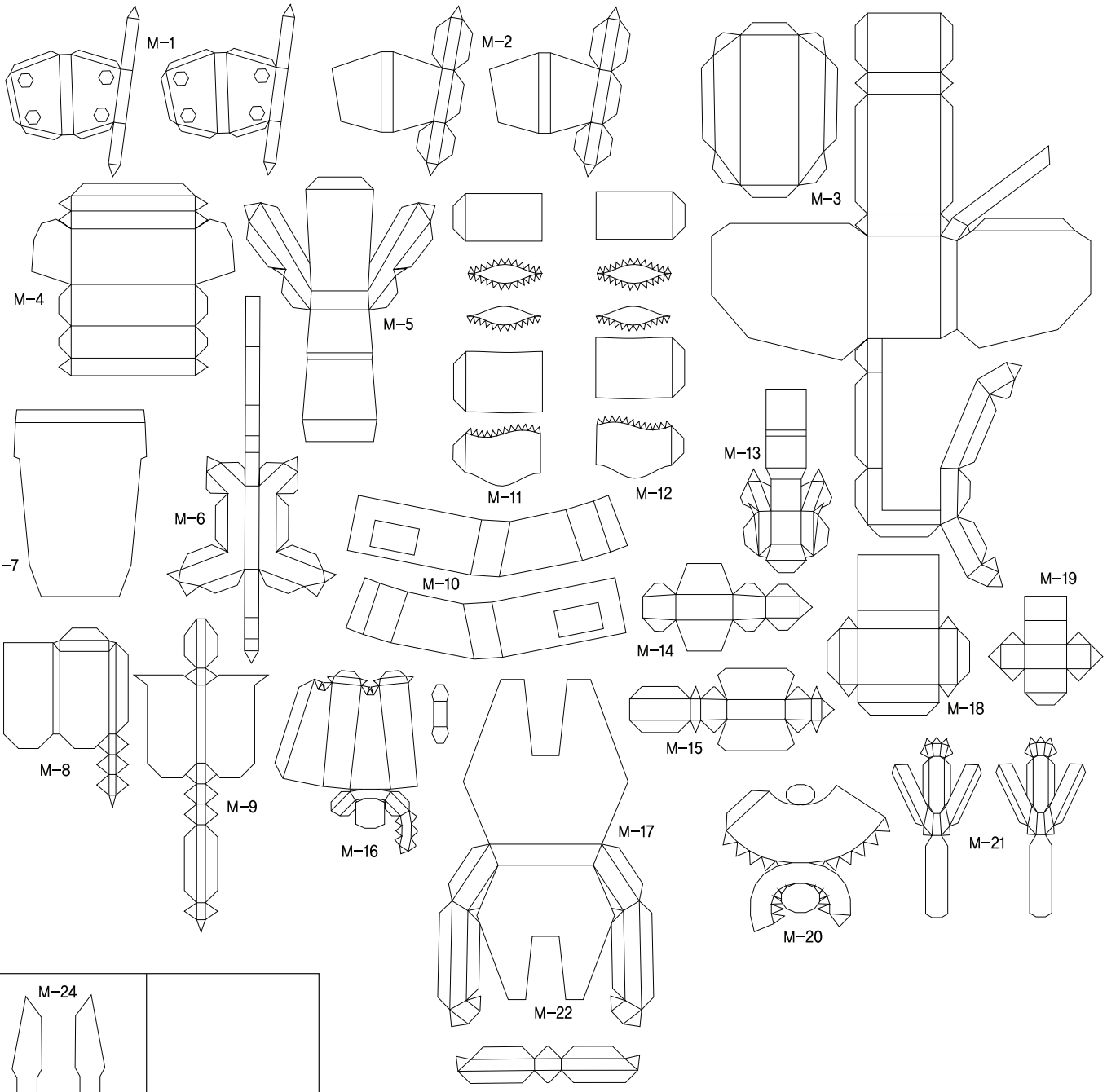

INFORMATION
1-17 C.PACK

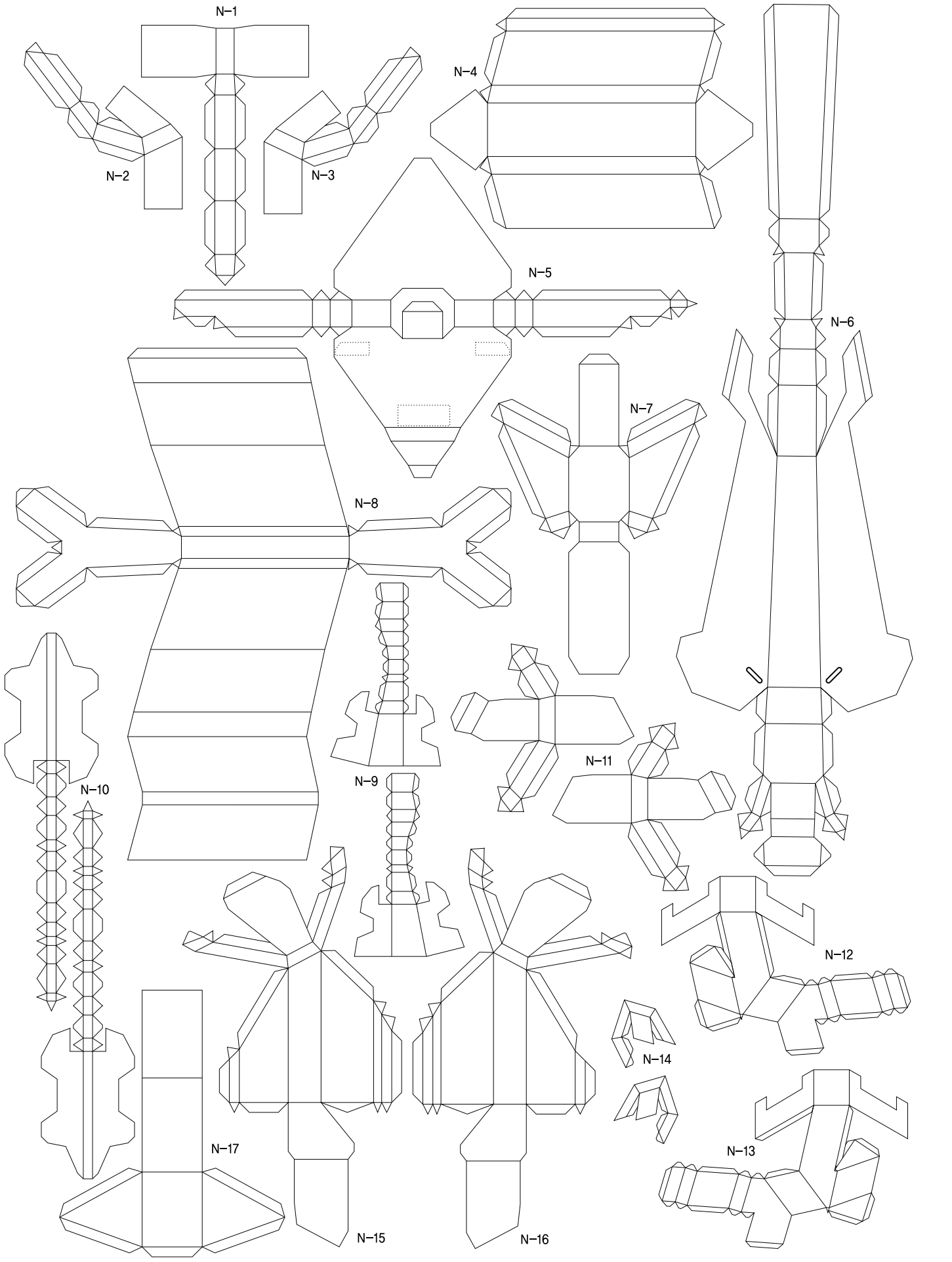

0 black MODELING BY CREAM-BREAD /GAT-X105 FULL WEAPON

INFORMATION	
1–8	C.PACK

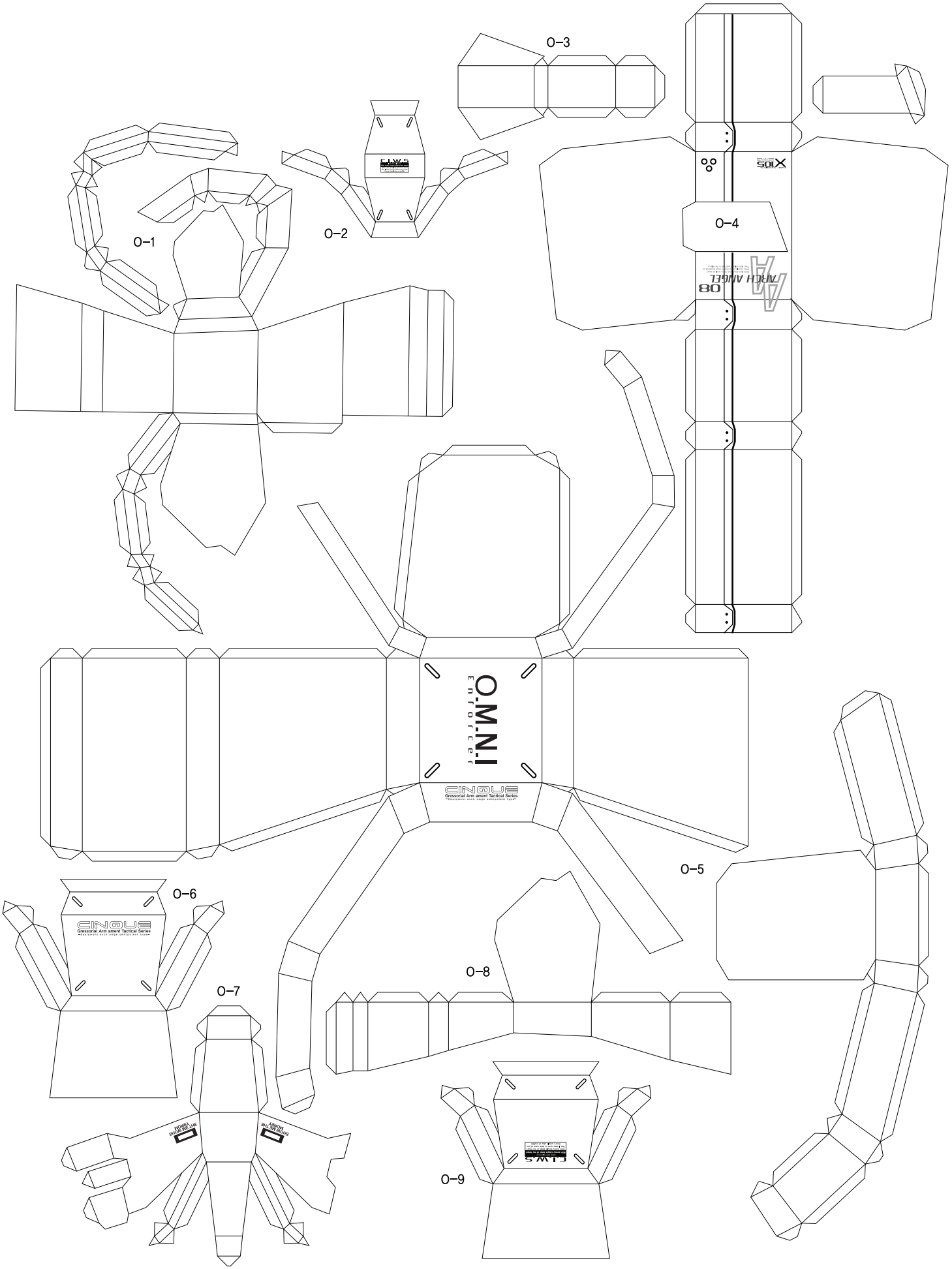

INFORMATION
1–8 C.PACK

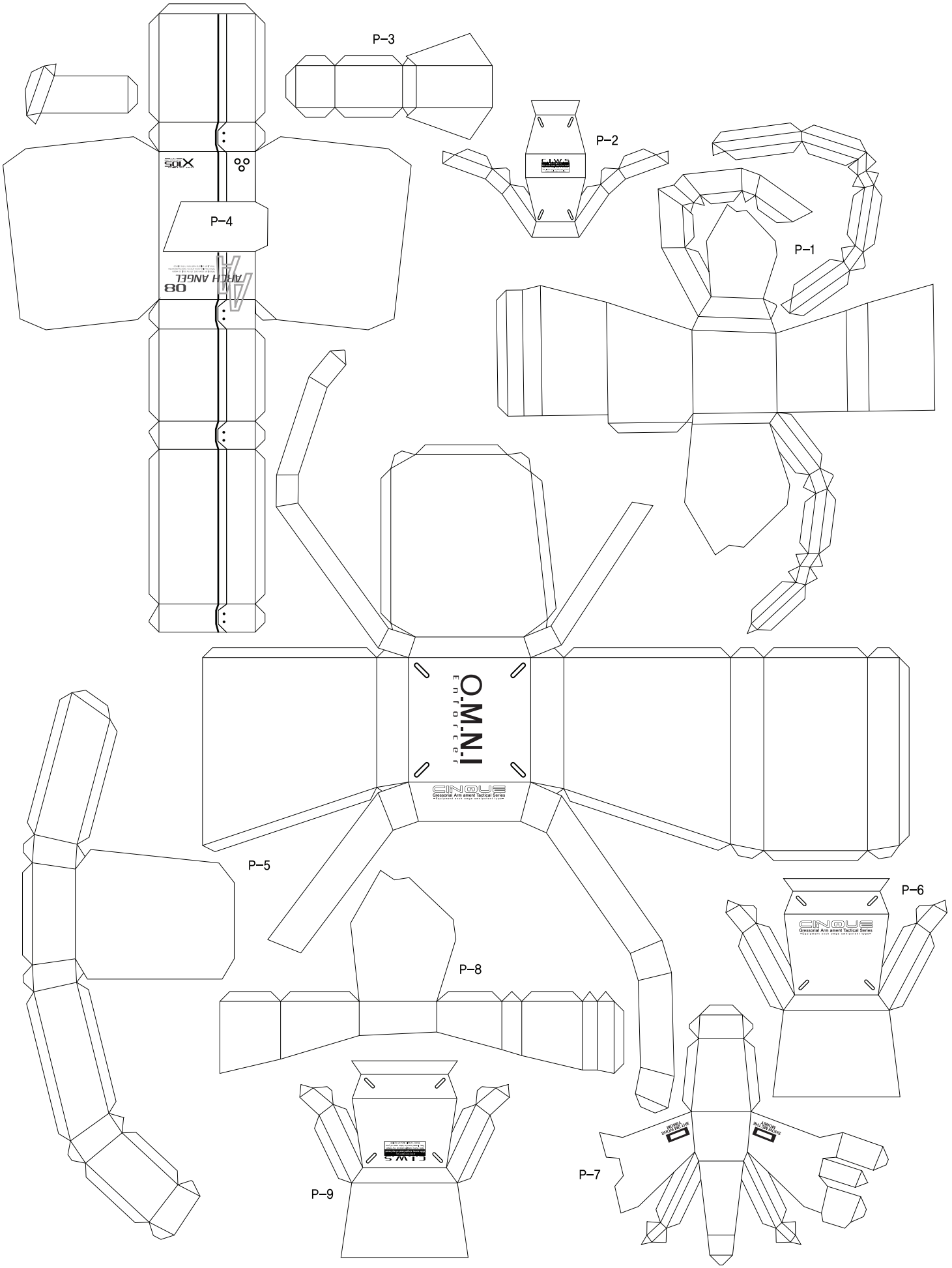

INFORMATION
1–22 C.PACK

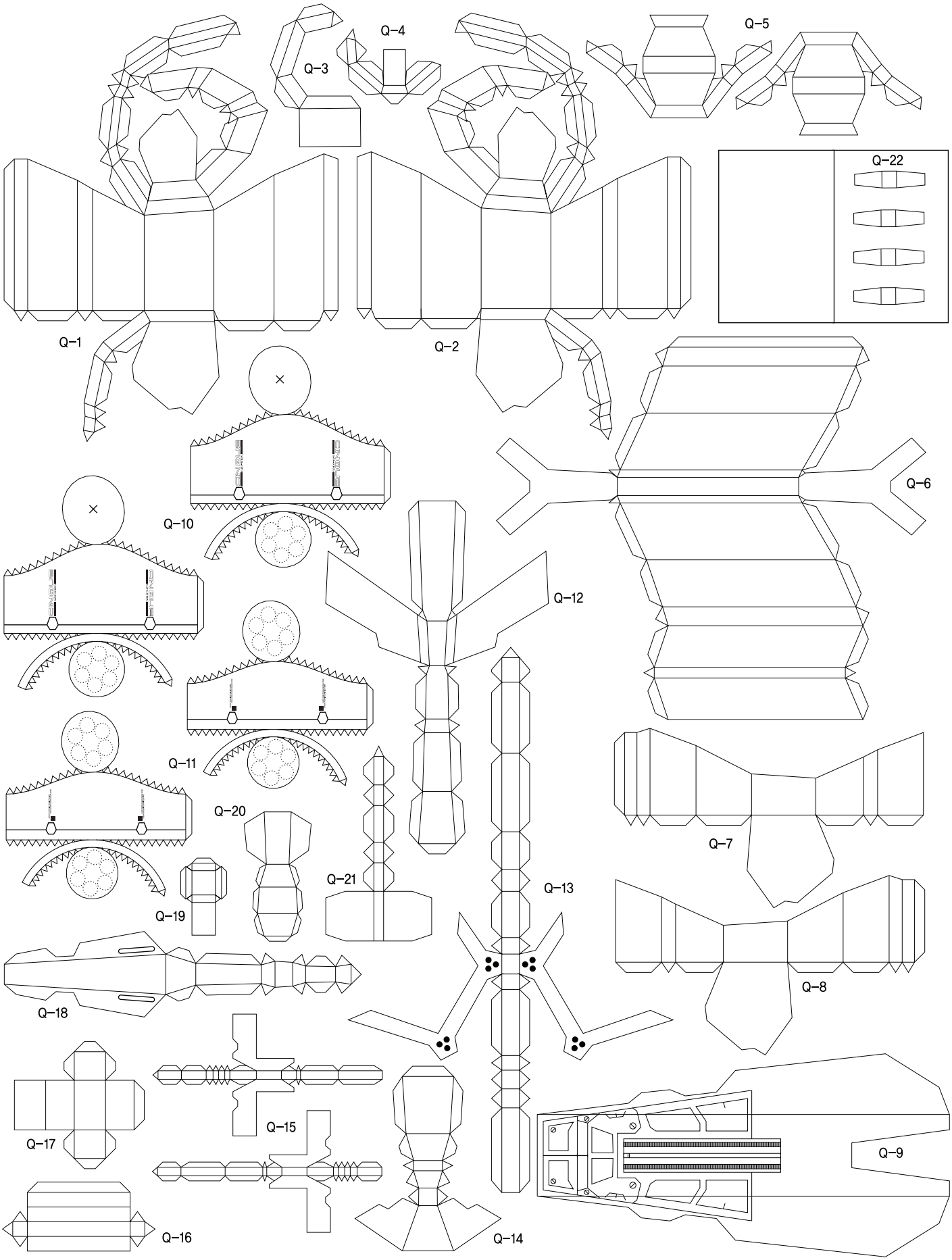

INFORMATION
1–22 C.PACK

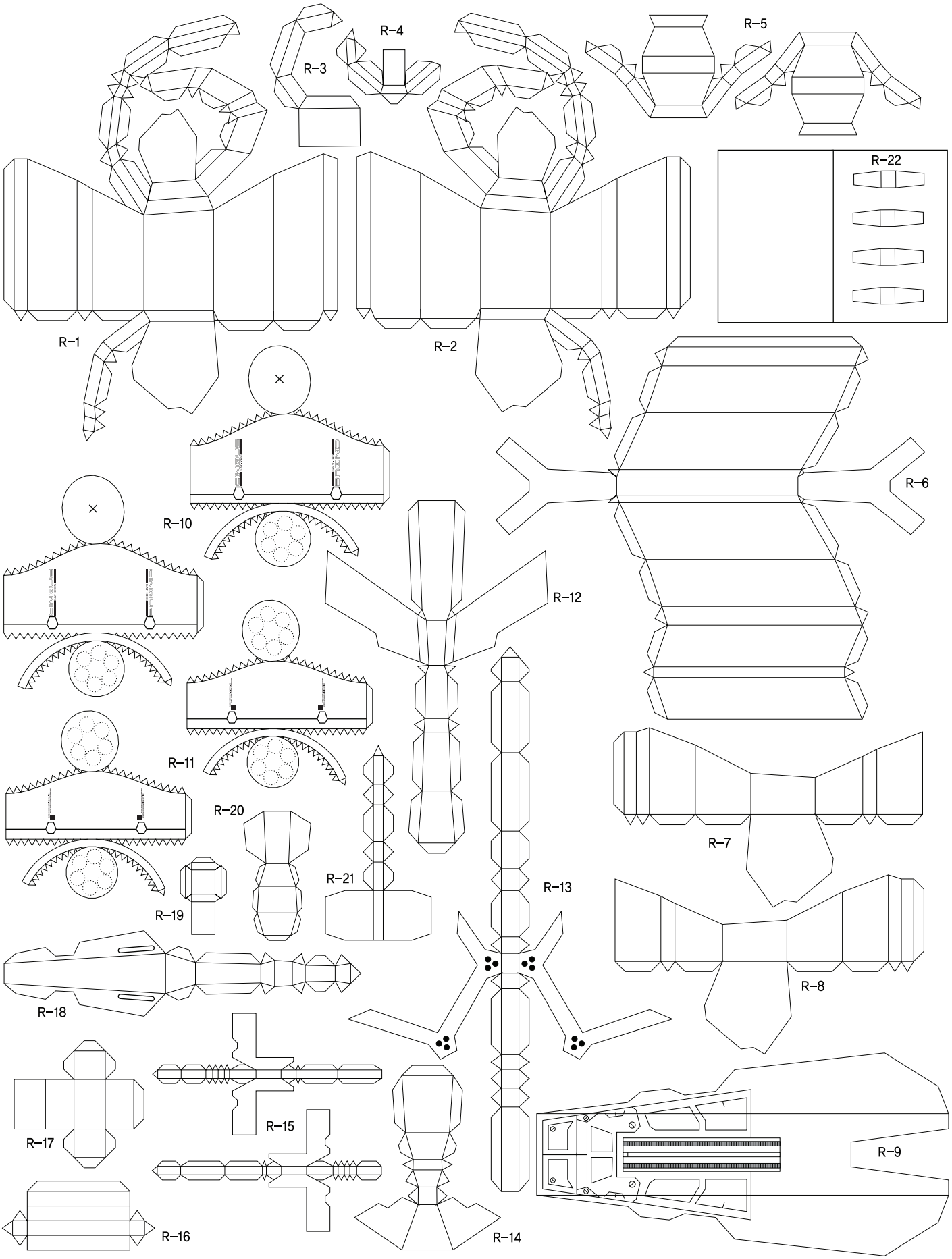

S gray

MODELING BY CREAM-BREAD /GAT-X105 FULL WEAPON

INFORMATION			
1–21	L.PACK	27–28	S.PACK
22–26	C.PACK		

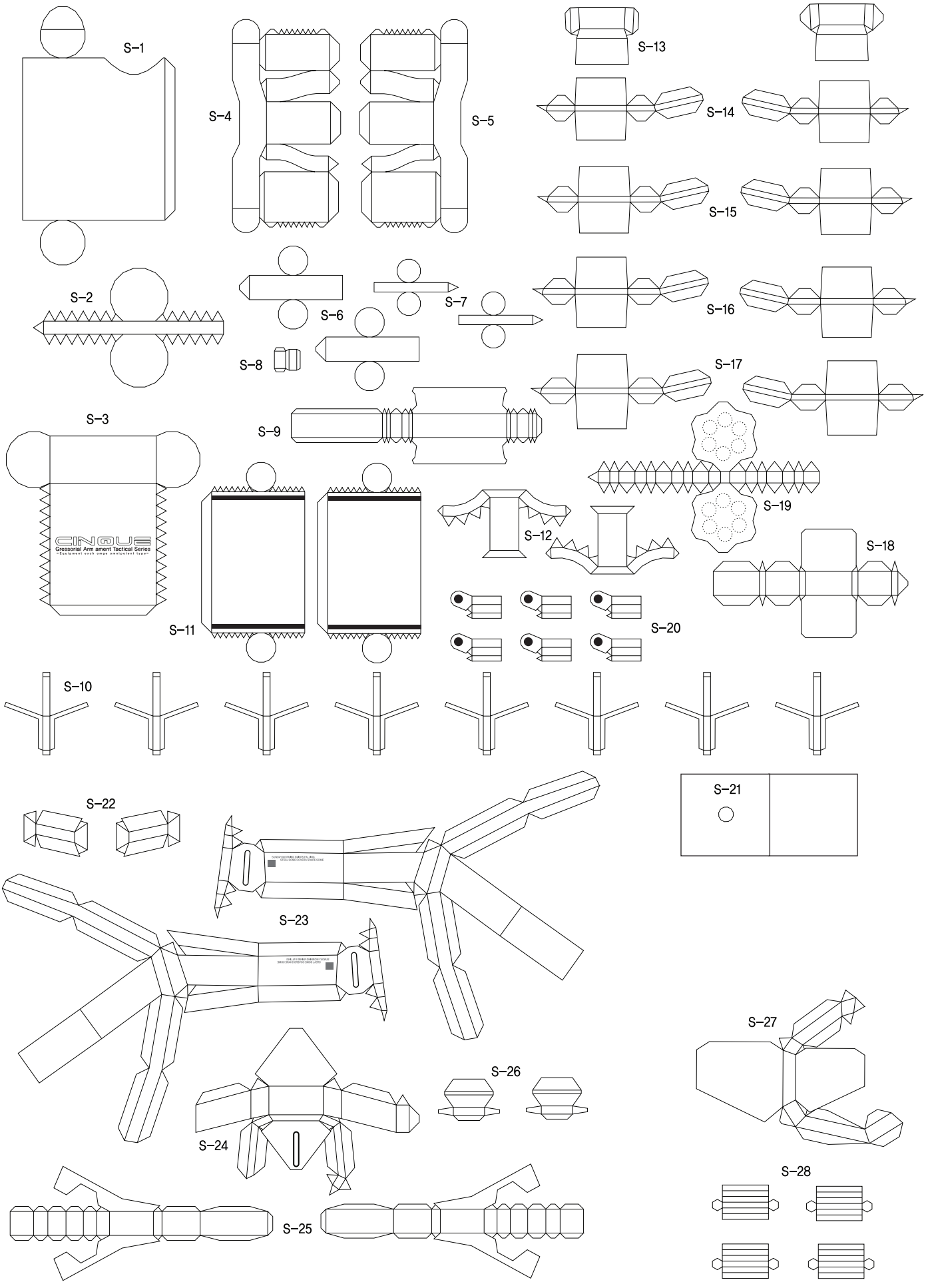

T gray MODELING BY CREAM-BREAD /GAT-X105 FULL WEAPON

INFORMATION
1–9 HEAD

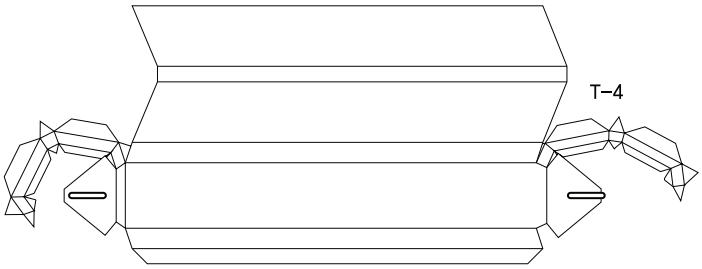

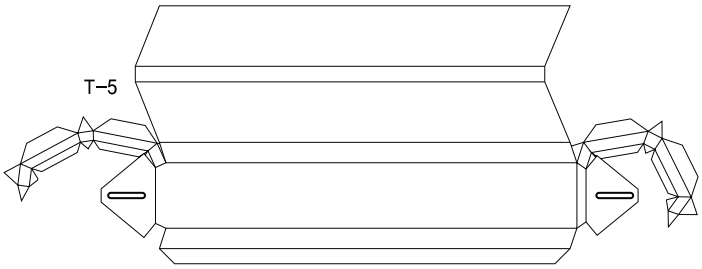

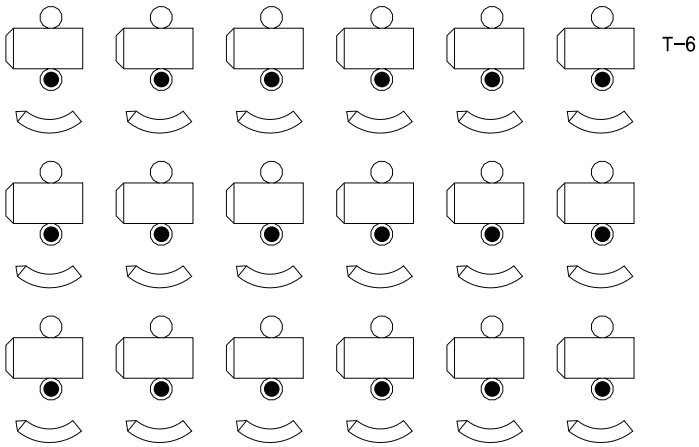

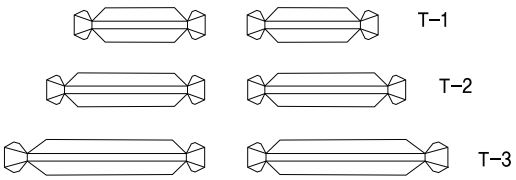

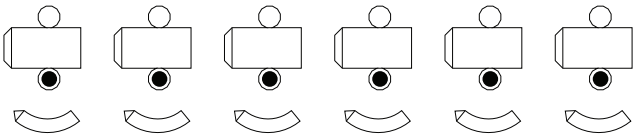

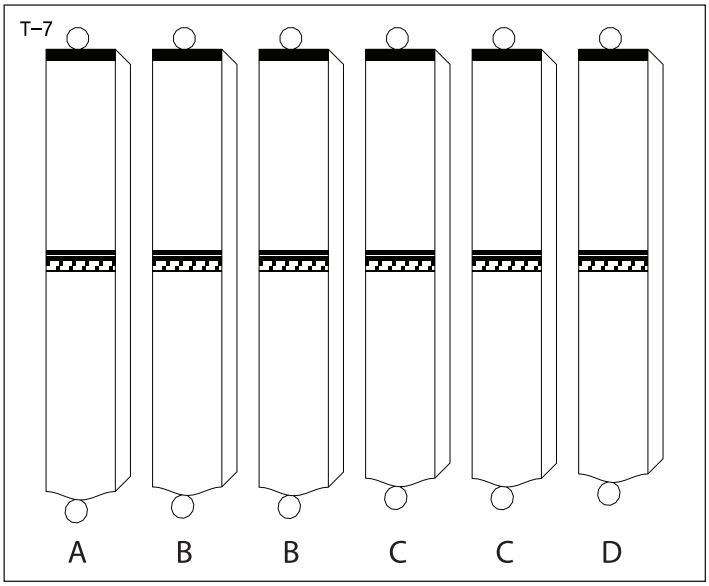

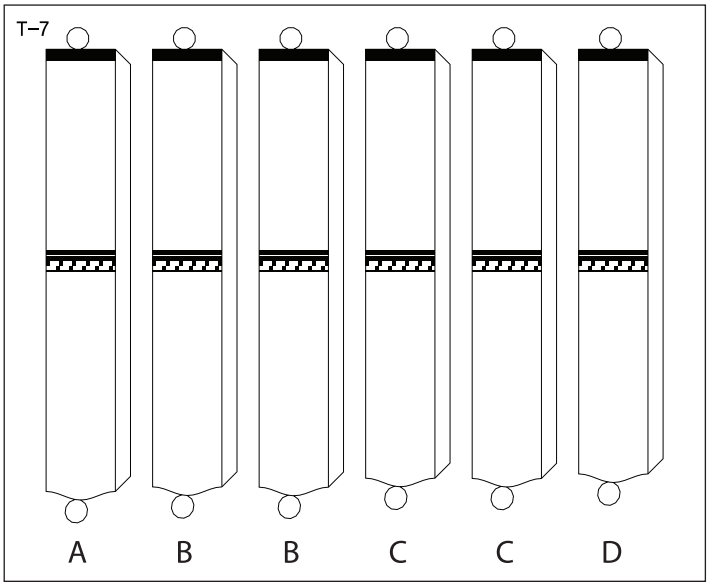

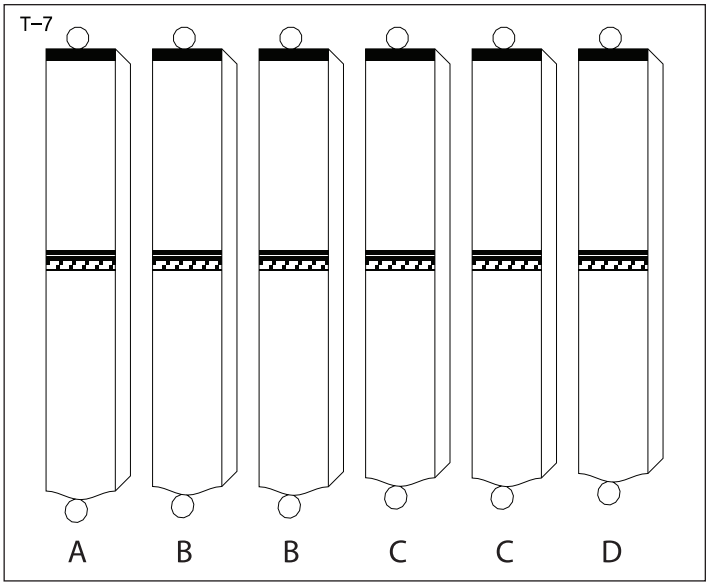

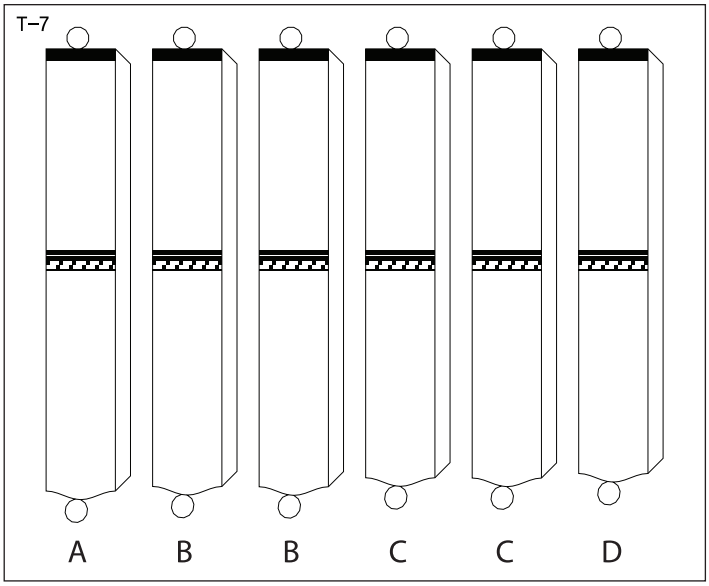

INFORMATION
1–20 A.PACK

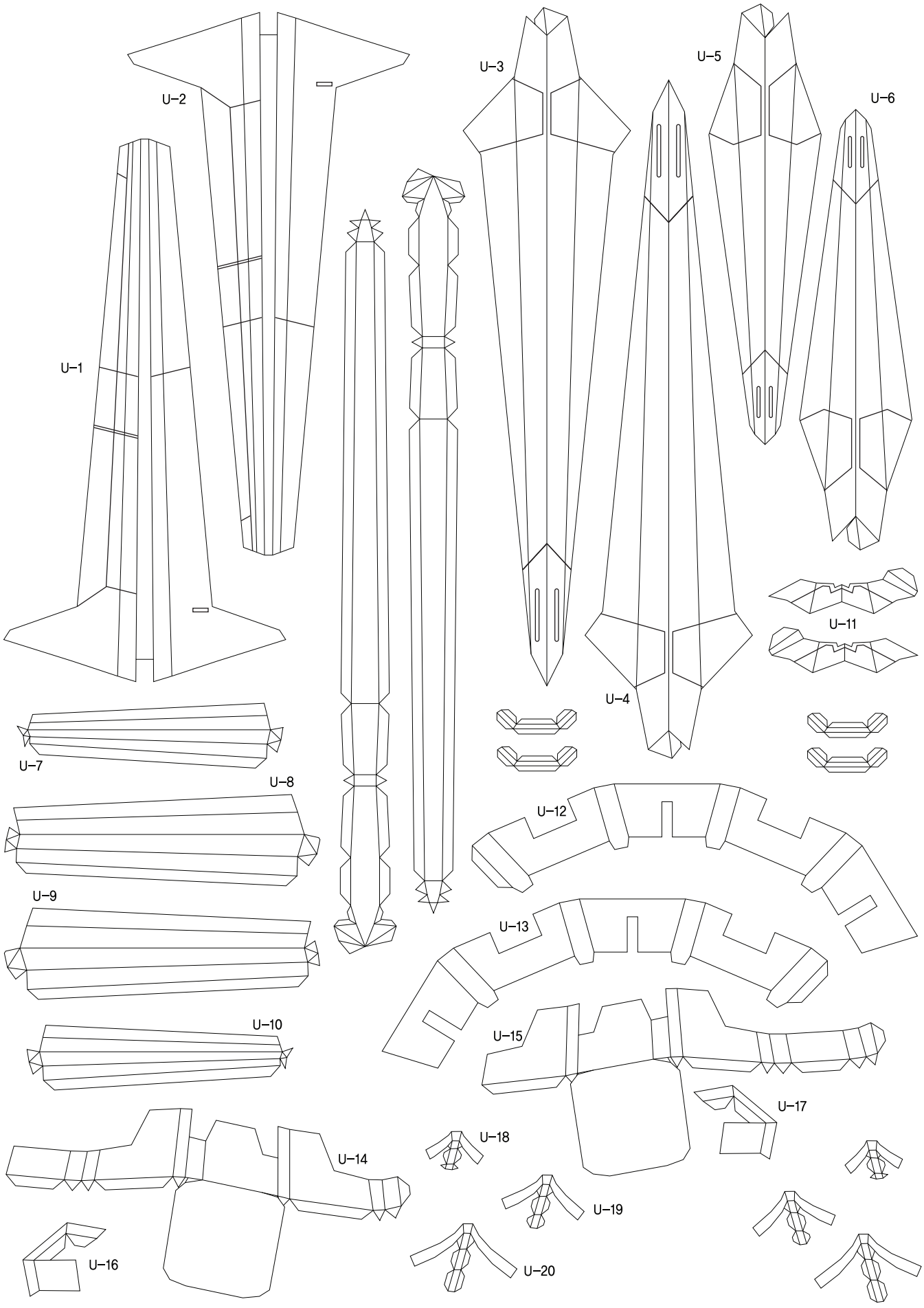

V red

MODELING BY CREAM-BREAD /GAT-X105 FULL WEAPON

INFORMATION	
1–9	A.PACK
10–18	SHIELD

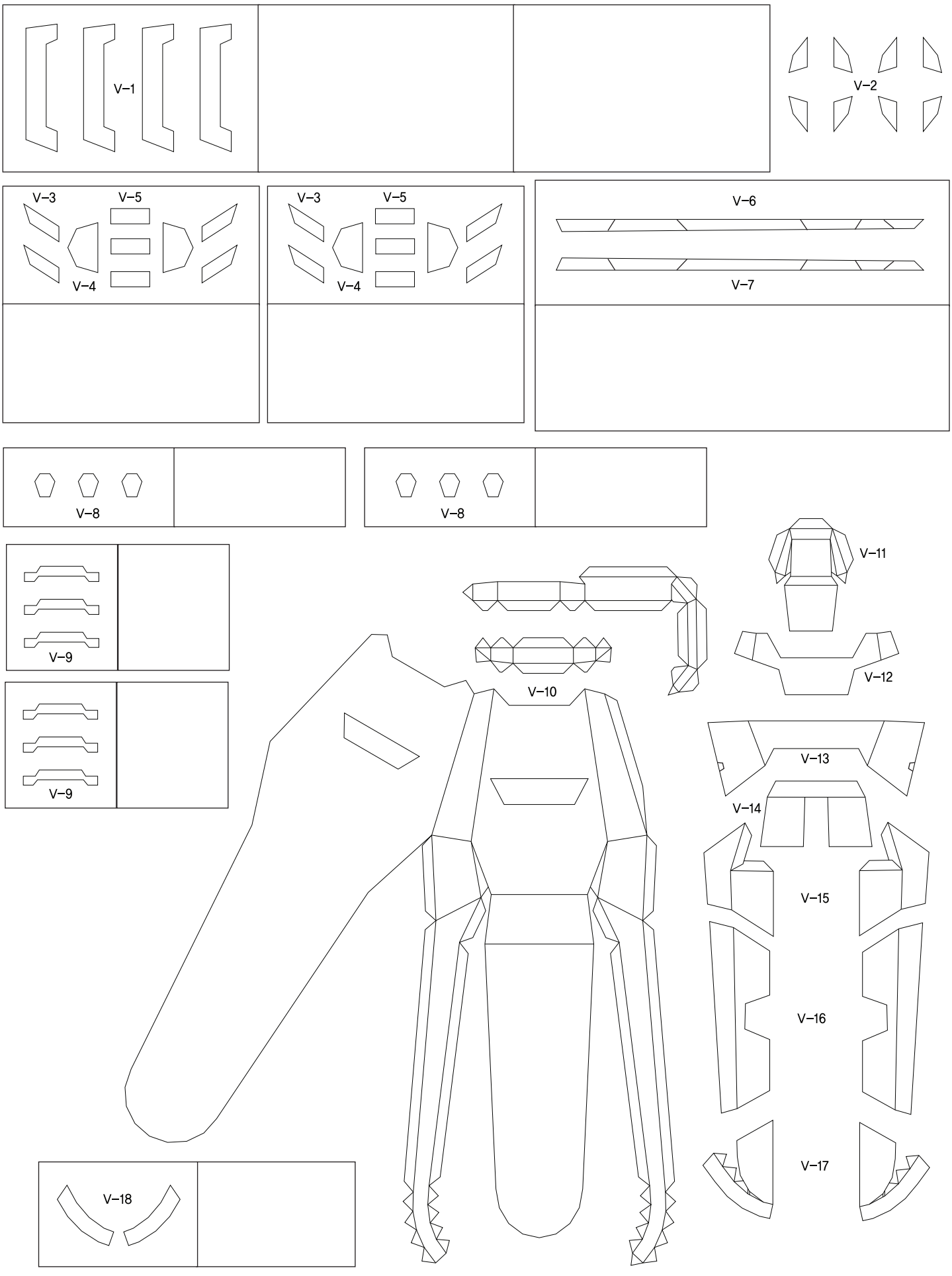

W red

MODELING BY CREAM-BREAD /GAT-X105 FULL WEAPON

INFORMATION	
1–8	C.PACK
9–13	L.PACK

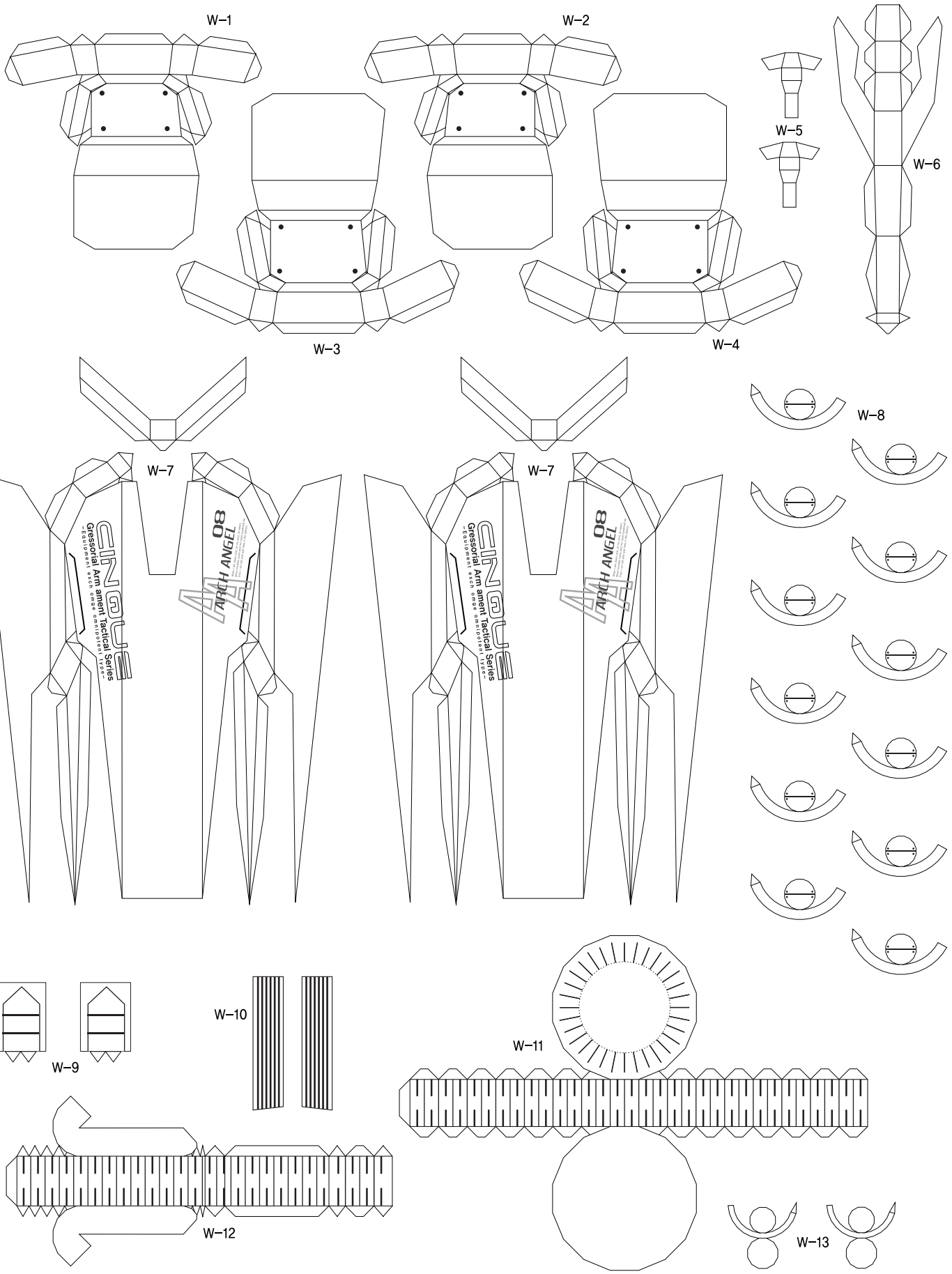

X green MODELING BY CREAM-BREAD /GAT-X105 FULL WEAPON

INFORMATION
1–16 L.PACK

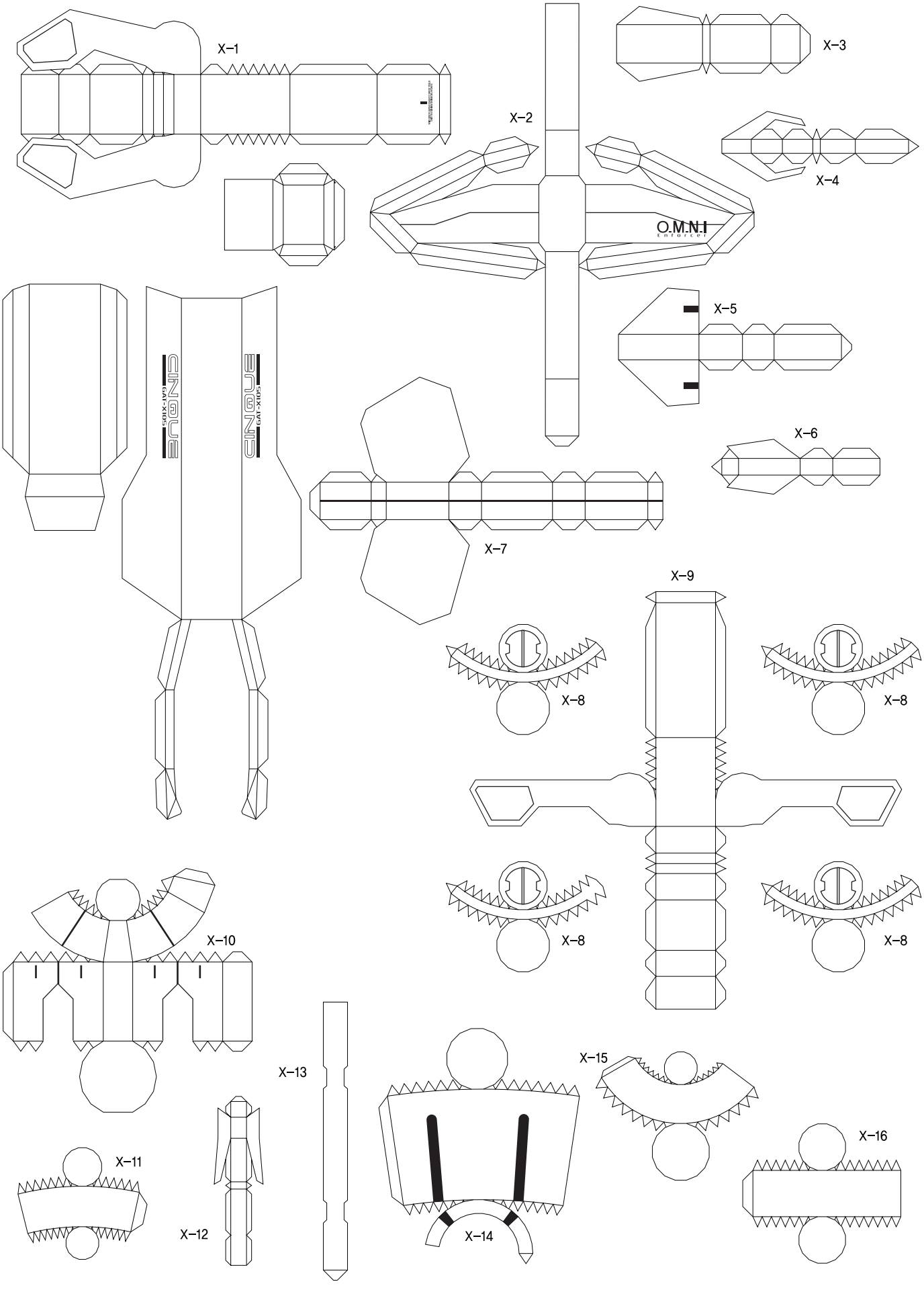

INFORMATION
1–8 L.PACK

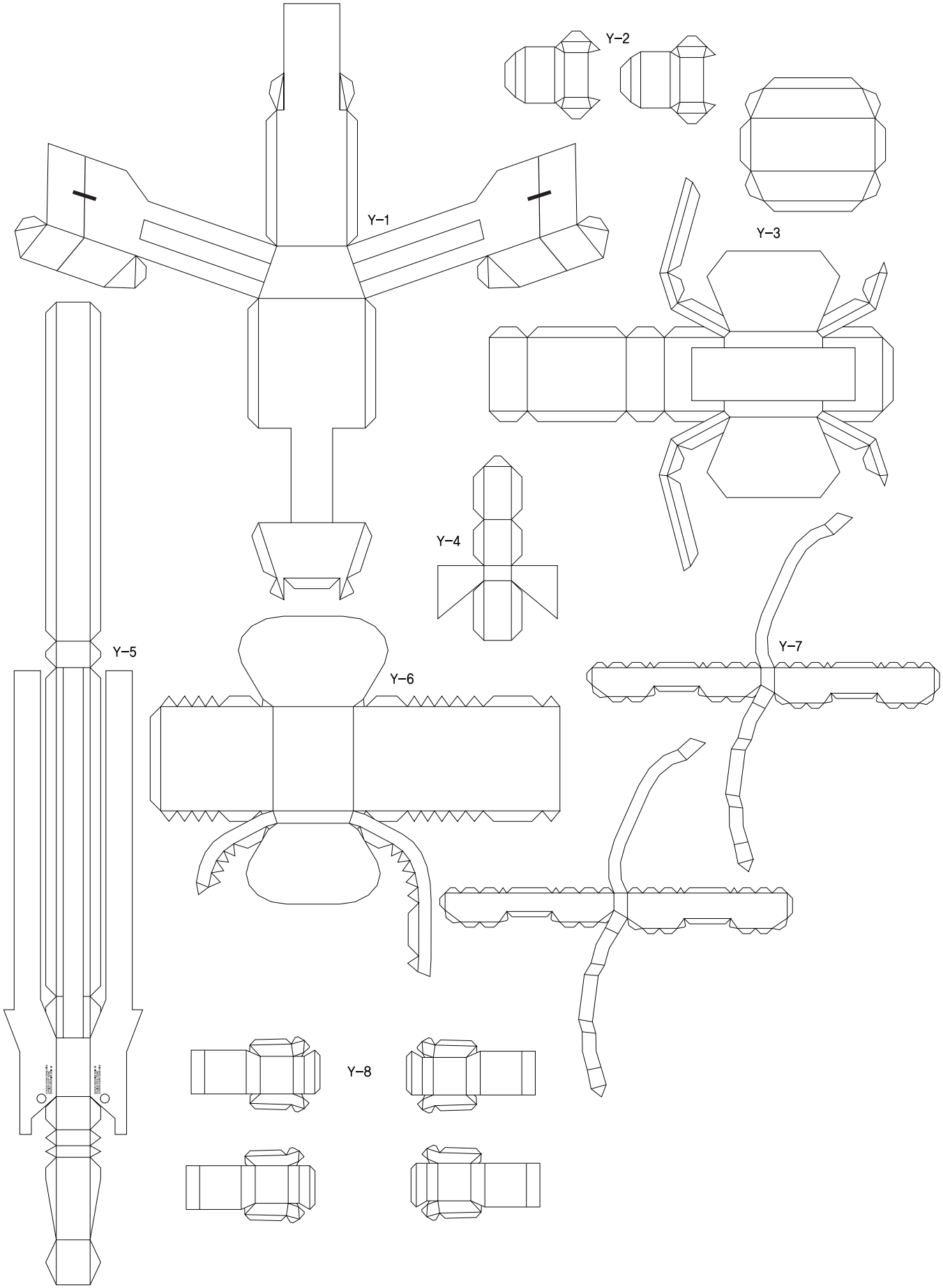

Z green MODELING BY CREAM-BREAD /GAT-X105 FULL WEAPON

INFORMATION
1–24 L.PACK

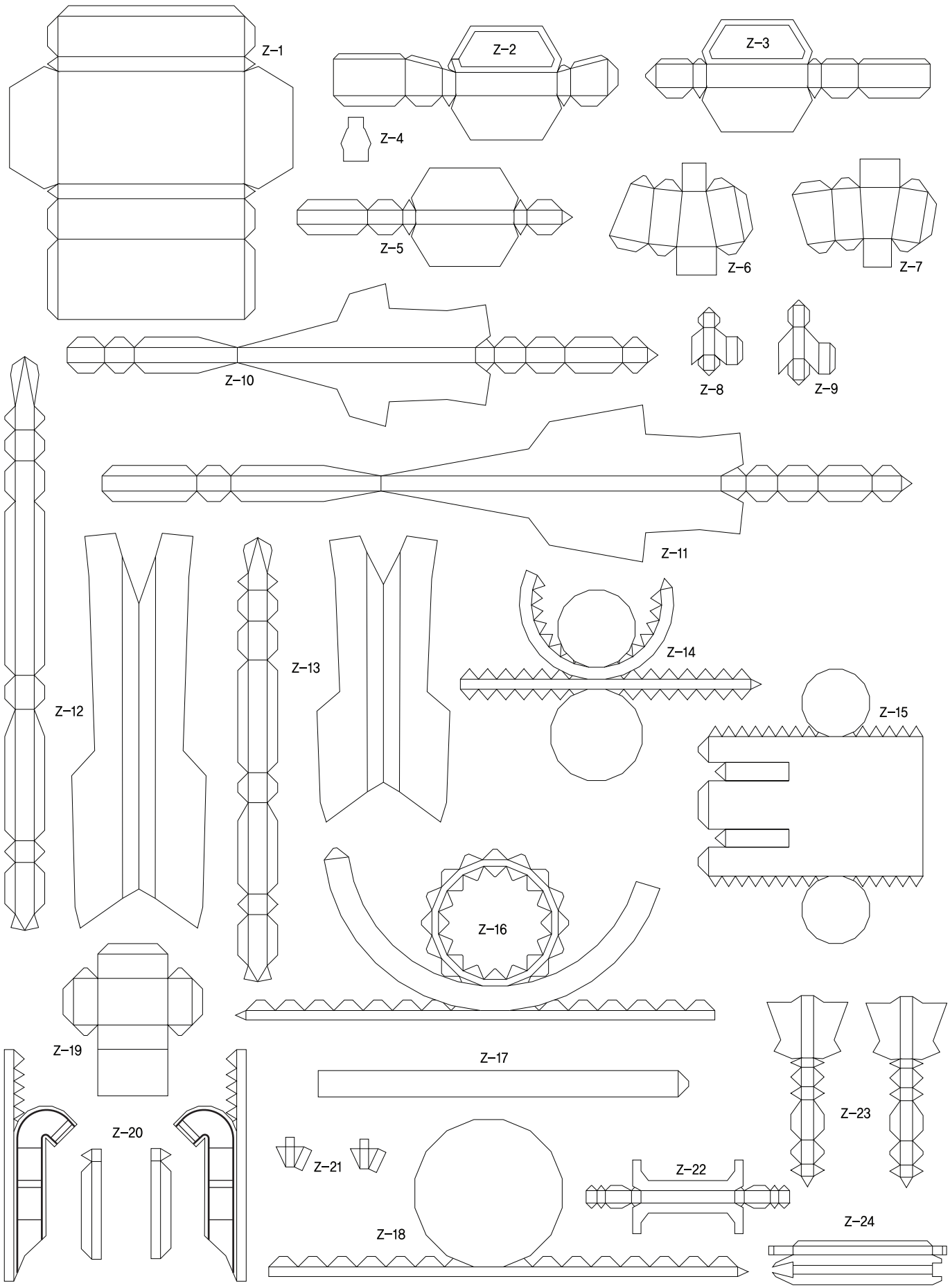

INFORMATION
1–8 L.PACK

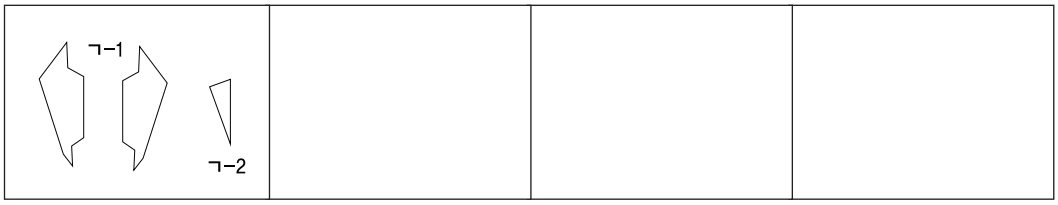

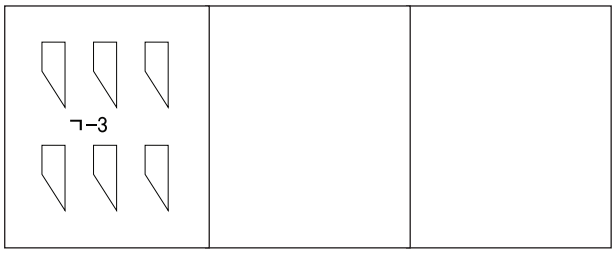

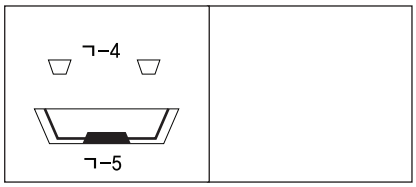

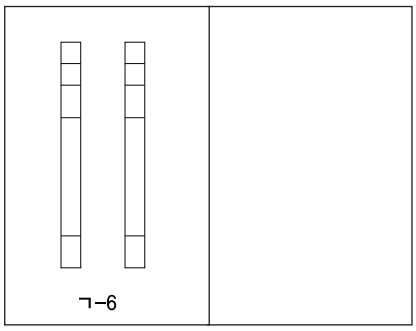

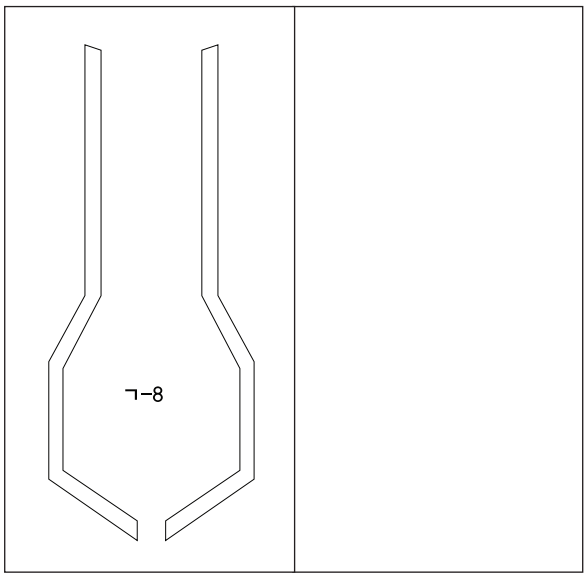

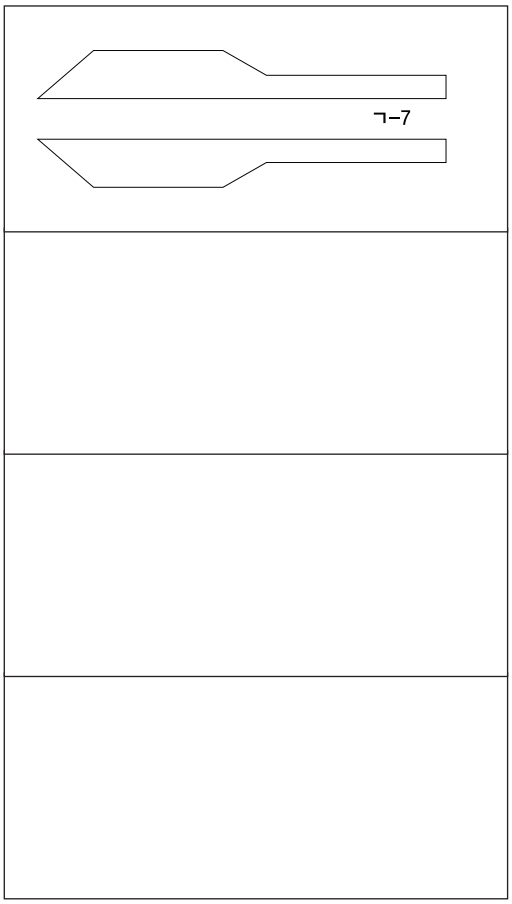

L.blue

MODELING BY CREAM-BREAD /GAT-X105 FULL WEAPON

ㄴ-14부품 M-4 부품과 붙이면 안됩니다. 끼우는거에요

INFORMATION

1-22 S.PACK

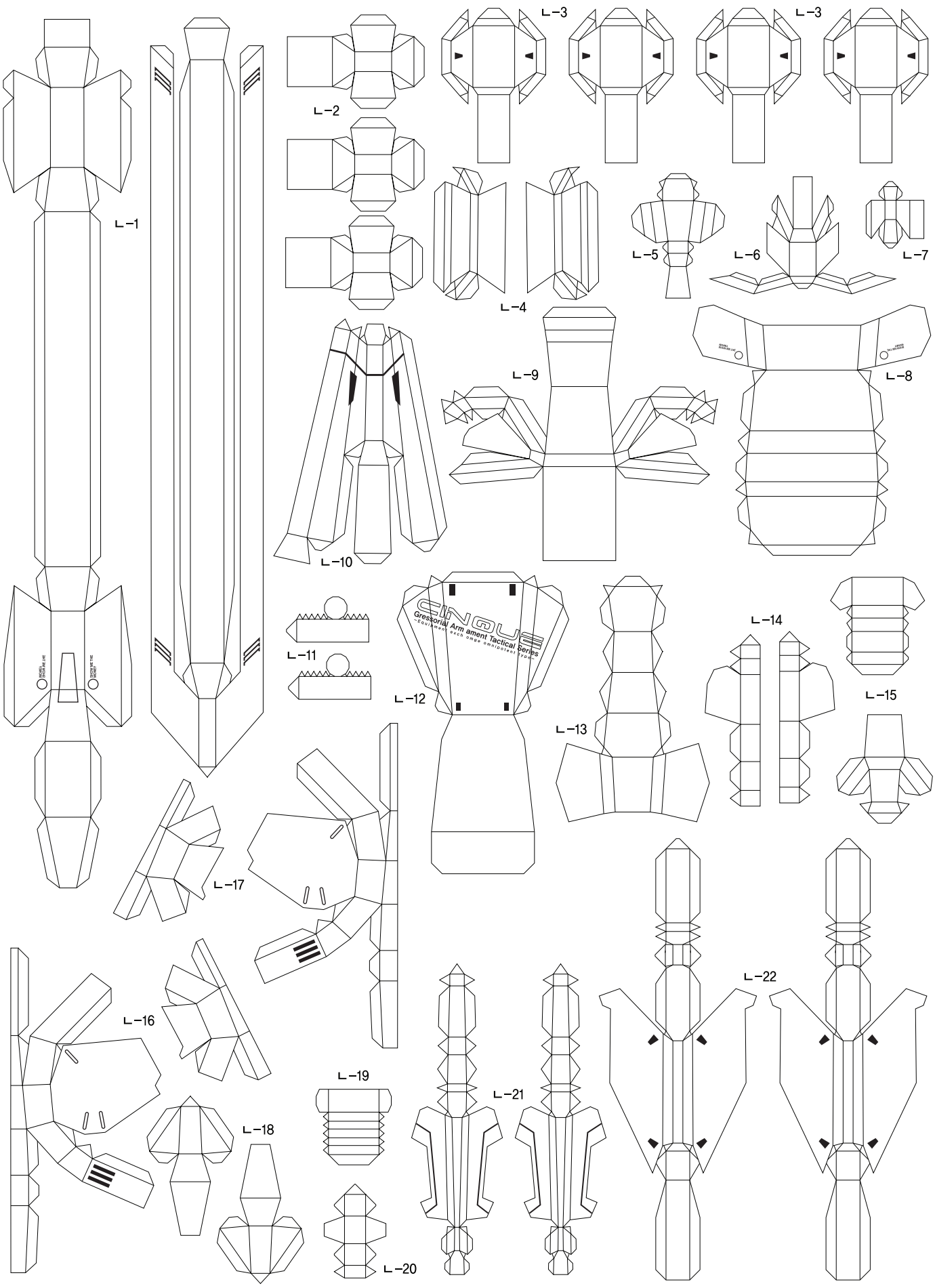

yellow MODELING BY CREAM-BREAD /GAT-X105 FULL WEAPON

INFORMATION			
1	A.PACK	6–11	L.PACK
2–5	SHIELD		

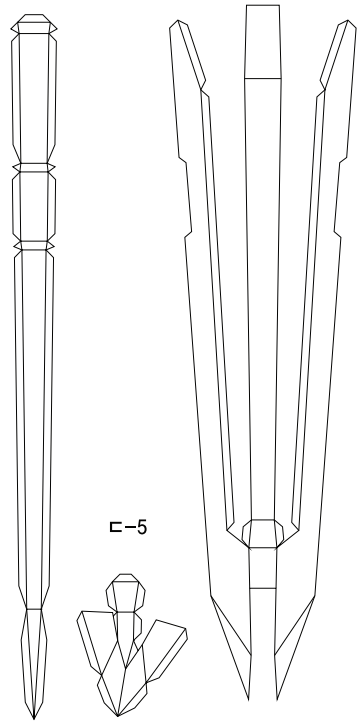

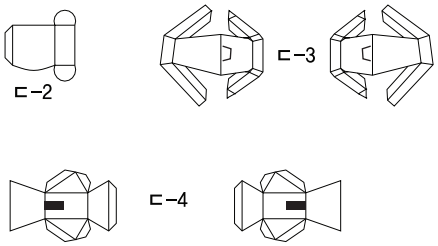

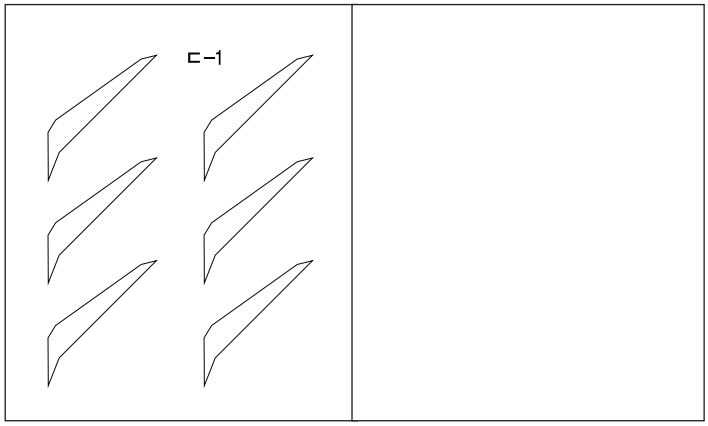

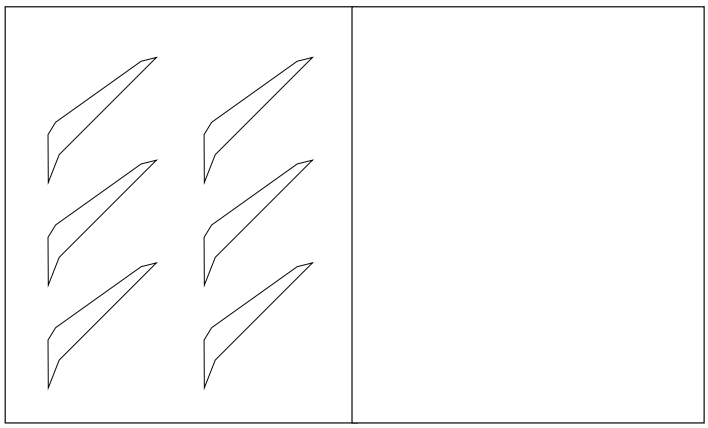

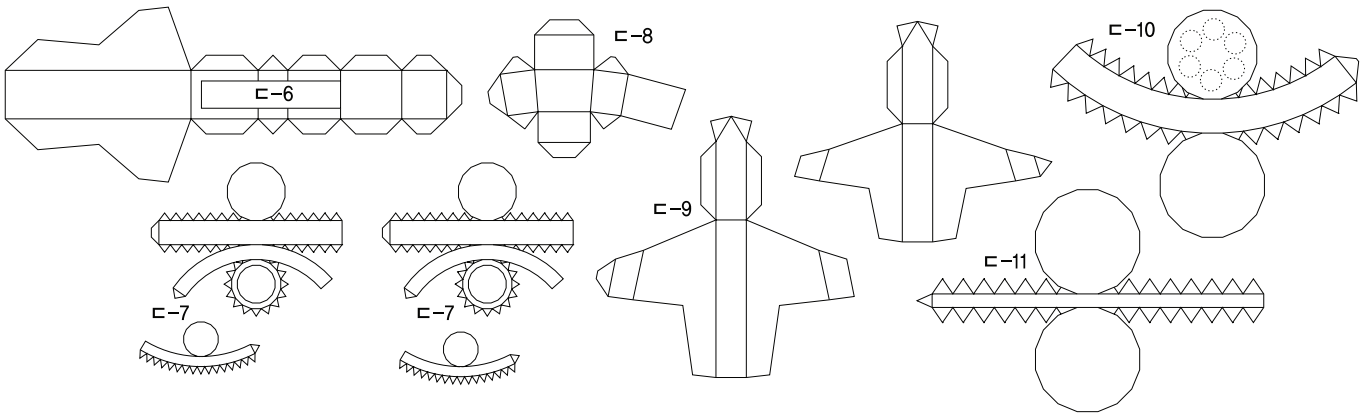

INFORMATION	
1–9	HEAD
11	RIFLE

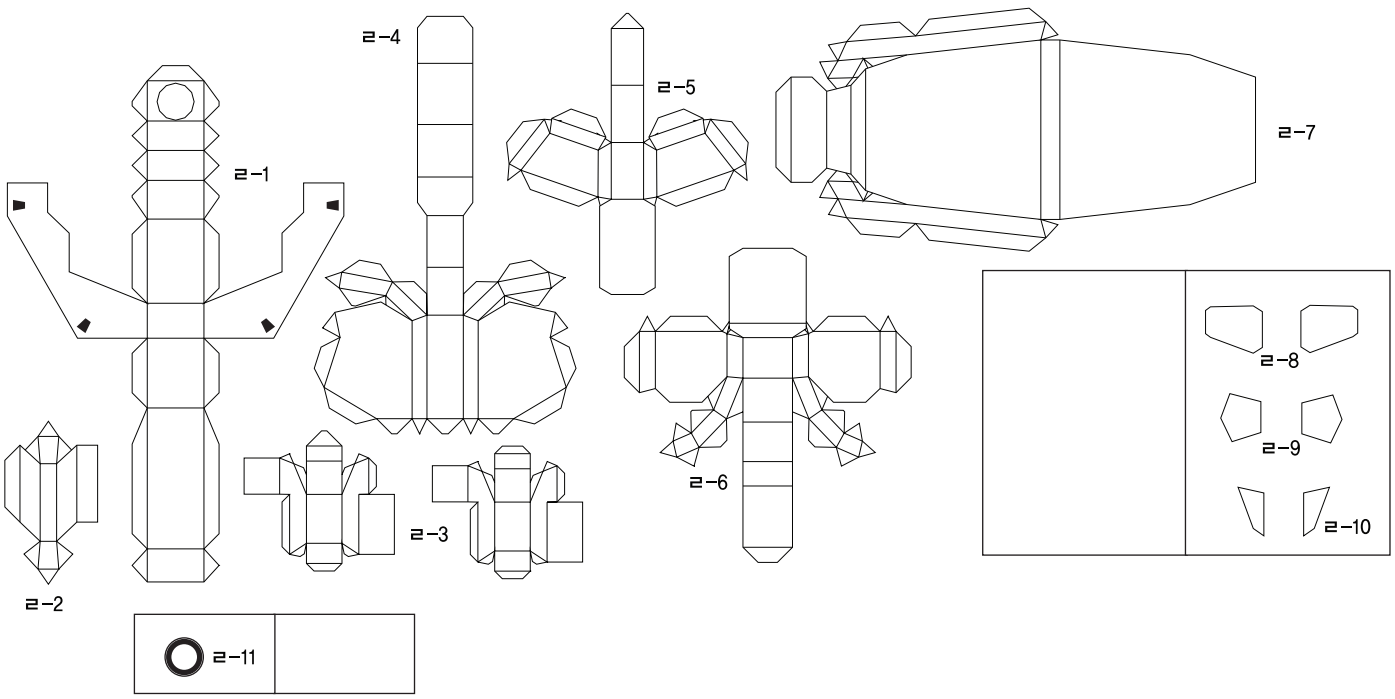

B-7 부품 위에 덧붙입니다.